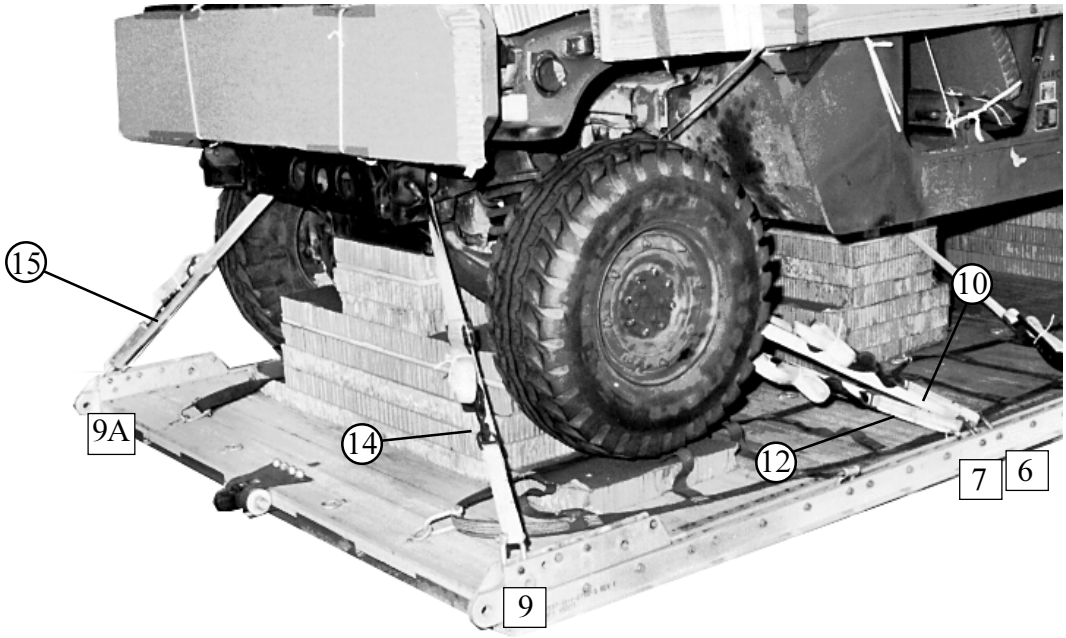

Lashing Number	Tie-down Clevis Number	Instructions
		Pass lashing:
10	6	Through tie-down bracket behind left front coil spring.
11	6A	Through tie-down bracket behind right front coil spring.
12	7	Around left lower control arm.
13	7A	Around right lower control arm.
14	9	Through tie-down bracket on end of left frame rail.
15	9A	Through tie-down bracket on end of right frame rail.

Figure 2-19. Lashings 10 through 15 Installed

INSTALLING AND SAFETY TYING SUSPENSION SLINGS

2-9. Install and safety tie four 16-foot (2-loop), type XXVI nylon webbing suspension slings according to FM 4-20.102/TO 13C7-1-5, and as shown in Figure 2-20.

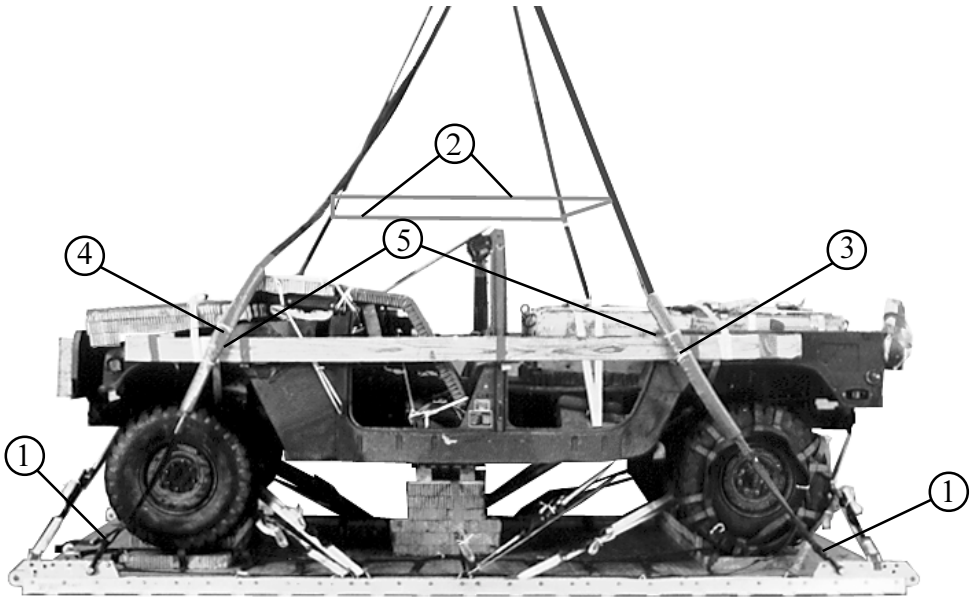

(1) Attach a 16-foot (2-loop), type XXVI nylon suspension sling to each tandem link with a large clevis.

(2) Raise the slings and install the deadman's tie 6 to 8 inches above the load.

(3) Position a 6- by 36-inch piece of felt around each front suspension sling 40 inches from the suspension clevis. Cover the padding completely with tape, extending the tape 6 inches above and below the padding.

(4) Position a 6- by 36-inch piece of felt around each rear suspension sling 36 inches from the suspension clevis. Secure the padding as described in step 3 above.

(5) Safety tie each sling to the body side boards with a length of type III nylon cord.

Figure 2-20. Suspension Slings Installed, Padded, and Safety Tied

STOWING CARGO PARACHUTES

2-10. Use two G-11 cargo parachutes on this load. Prepare and stow the cargo parachutes as shown in Figure 2-21.

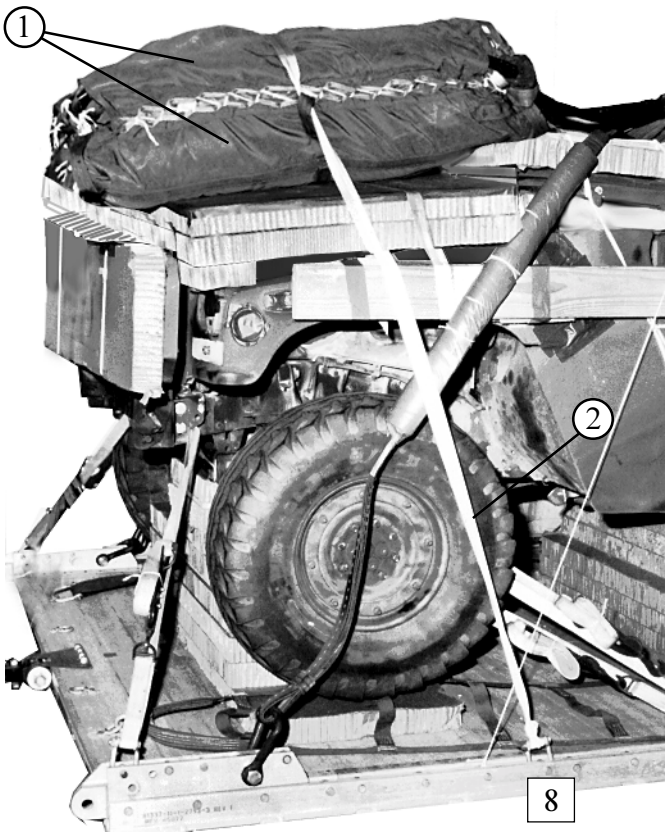

1. Prepare two G-11B cargo parachutes and stow them on the honeycomb positioned on the hood of the truck. Prepare and stow the parachutes according to FM 4-20.102/TO 13C7-1-5.

2. Install the parachute restraint strap according to FM 4-20.102/TO 13C7-1-5. Secure the restraint strap to clevises 8 and 8A.

Figure 2-21. G-11 Cargo Parachutes Stowed

INSTALLING PARACHUTE RELEASE

2-11. Prepare and install an M-1 cargo parachute release according to FM 4-20.102/TO 13C7-1-5, and as shown in Figure 2-22.

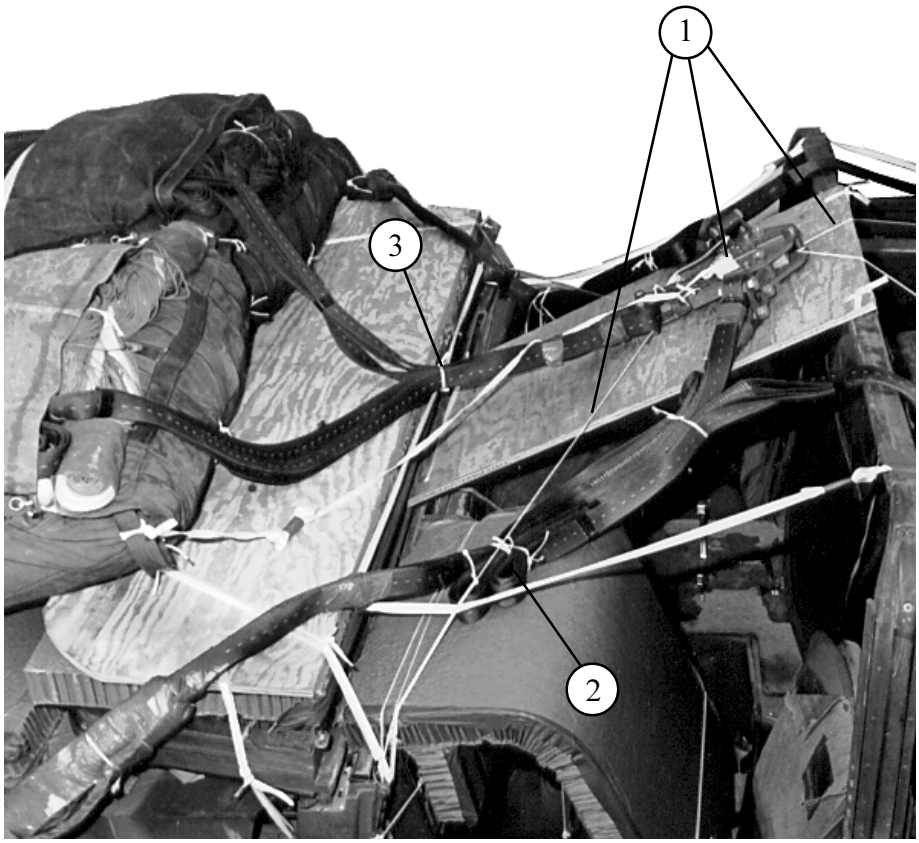

(1) Place the M-1 release on the 3/4- by 24- by 42-inch plywood over the driver compartment. Secure it to convenient points on the load with type III nylon cord.

(2) S-fold any slack in the suspension slings. Tie the folds in place with type I, 1/4-inch cotton webbing.

(3) Tie the riser extensions together with a length of type I, 1/4-inch cotton webbing.

Figure 2-22. M-1 Cargo Parachute Release Installed

INSTALLING EXTRACTION SYSTEM

2-12. Install the extraction force transfer coupling (EFTC) according to FM 4-20.102/TO 13C7-1-5, and as shown in Figure 2-23.

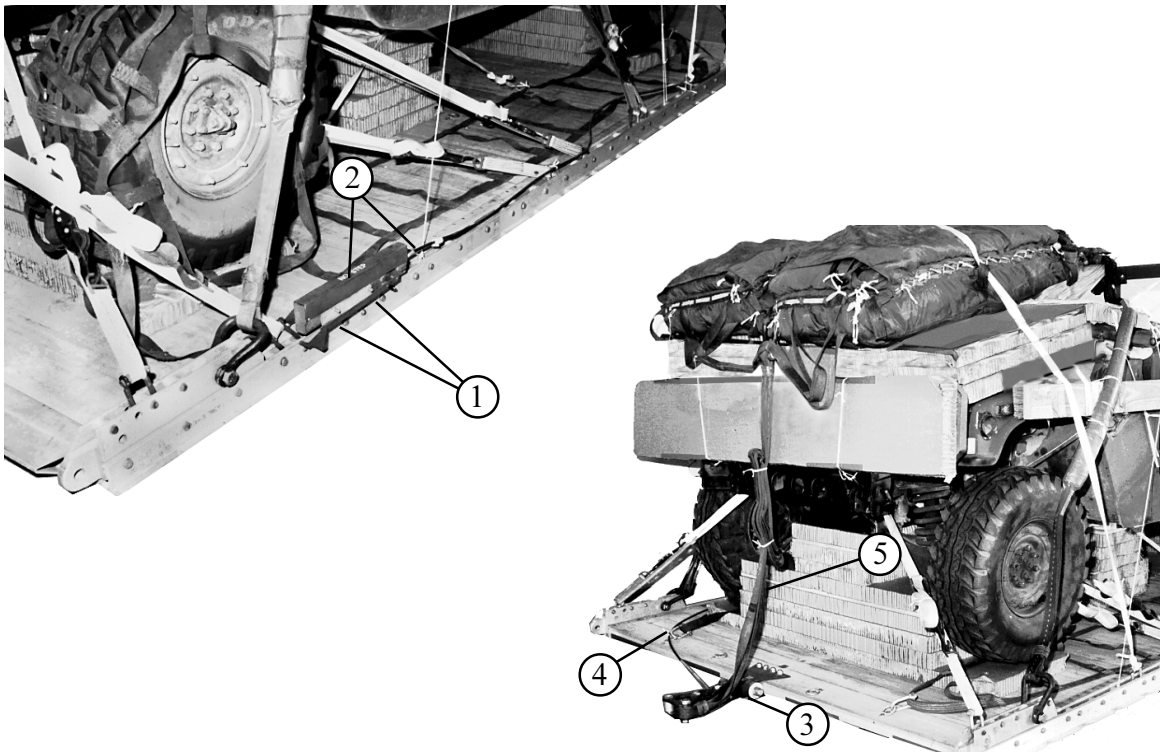

1. Install the EFTC mounting brackets in the front mounting holes in the left platform rail.
2. Attach a 16-foot release cable to the actuator. Install the actuator to the EFTC mounting brackets.
3. Install the latch assembly to the extraction bracket. Attach the release cable to the latch assembly.
4. Tie the release cable to tie-down ring D8 on the rear platform panel with a length of type I, 1/4-inch cotton webbing.
5. Install a 9-foot (2-loop), type XXVI nylon webbing deployment line on the load.

Figure 2-23. EFTC Installed

INSTALLING PROVISIONS FOR EMERGENCY RESTRAINTS

2-13. Select and install provisions for emergency restraint according to the emergency aft restraint requirements table in FM 4-20.102/TO 13C7-1-5.

PLACING EXTRACTION PARACHUTE

2-14. Select the extraction parachute and extraction line needed using the extraction line requirements table in FM 4-20.102/TO13C7-1-5. Rig the extraction line in an extraction line bag according to TM 10-1670-286-20/TO 13C5-2-41. Place the extraction parachute and extraction line on the load for installation in the aircraft.

MARKING RIGGED LOAD

2-15. Mark the rigged load according to FM 4-20.102/TO 13C7-1-5 and as shown in Figure 2-24. Complete Shipper's Declaration for Dangerous Goods according to AFJMAN 24-204/TM 38-250. If the load varies from the one shown, the weight, height, CB, tip-off curve, and parachute requirements must be recomputed.

EQUIPMENT REQUIRED

2-16. Use the equipment listed in Table 2-1 to rig this load. The equipment for rigging an accompanying load is NOT given in Table 2-1.

CAUTION
Make the final rigger inspection required by FM 4-20.102/ TO 13C7-1-5 before the load leaves the rigging site.

Note: This load includes a 1,800-pound accompanying load.

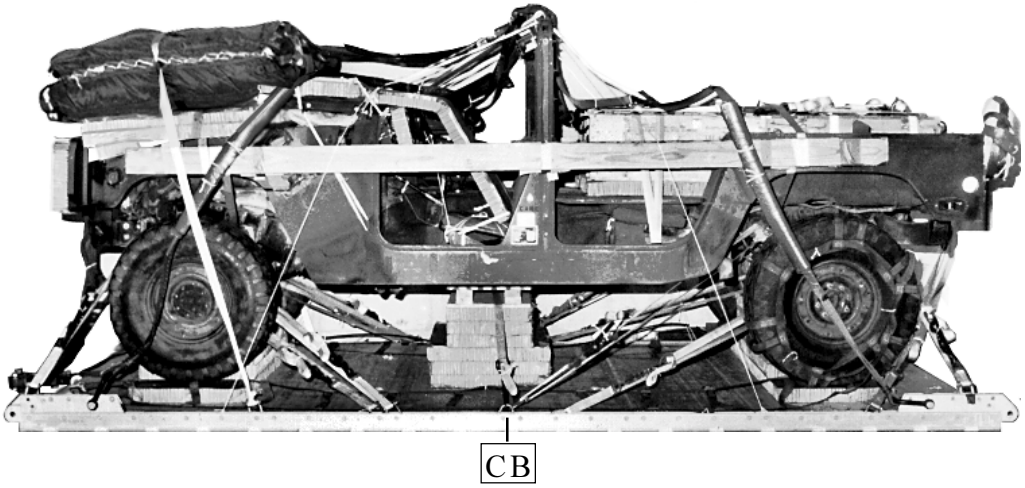

RIGGED LOAD DATA

Weight: Load shown	9,750 pounds
Maximum load allowed	10,500 pounds
Height (with two G-11B parachutes)	86 inches
Width	108 inches
Length (overall)	215 inches
Overhang: Front	0 inches
Rear (EFTC)	18 inches
CB (from front edge of platform)	95 inches

Figure 2-24. M998 Cargo/Troop Carrier Rigged for Low-Velocity Airdrop

Table 2-1. Equipment Required for Rigging the M998 Cargo/Troop Carrier on a 16-Foot Platform

National Stock Number	Item	Quantity
8040-00-273-8713	Adhesive, paste, 1-gal	As required
4030-00-090-5354	Clevis, suspension, 1-in (large)	5
4020-00-240-2146	Cord, nylon, type III, 550-lb	As required
1670-00-434-5785	Coupling assembly, airdrop, extraction force transfer with cable, 16-ft	1
	Cover:	
1670-00-360-0328	Clevis, large	1
8135-00-664-6958	Cushioning material, packaging, cellulose wadding	As required
8305-00-958-3685	Felt, 1/2-in thick	As required
1670-01-183-2678	Leaf, extraction line (line bag)	2
	Line, drogue (for C-17)	
1670-01-062-6313	60-ft (3-loop), type XXVI	1
	Line, extraction:	
1670-01-062-6313	For C-130: 60-ft (3-loop), type XXVI	1
1670-01-107-7651	For C-141: 140-ft (3-loop), type XXVI	1
	For C-5:	
1670-01-062-6313	60-ft, (3-loop), type XXVI and	1
1670-01-107-7651	140-ft (3-loop), type XXVI	1
	For C-17:	
1670-01-107-7651	140-ft (3-loop), type XXVI	1
	Link Assembly:	
	Two-point:	1
5306-00-435-8994	Bolt, 1-in diam, 4-in long	(2)
5310-00-232-5165	Nut, 1-in, hexagonal	(2)
1670-00-003-1953	Plate, side, 3 3/4-in	(2)
5365-00-007-3414	Spacer, large	(2)
	Lumber:	
5510-00-220-6448	2- by 6-in	As required
5510-00-220-6274	4- by 4-in	As required
5315-00-010-4659	Nail, steel wire, 8d	As required

Table 2-1. Equipment Required for Rigging the M998 Cargo/Troop Carrier on a 16-Foot Platform (continued)

National Stock Number	Item	Quantity
1670-00-753-3928	Pad, energy-dissipating (honeycomb)	
	3- by 36- by 96-in	10 sheets
	Parachute:	
	Cargo:	
1670-01-016-7841	G-11B	2
	Cargo extraction:	
1670-01-063-3716	22-ft (for C-17, use H-block with this parachute.)	1
	Drogue (for C-17)	
1670-01-063-3715	15-ft	1
	Platform, airdrop, type V, 16-ft	
1670-01-353-8425	Bracket assembly, coupling	(1)
1670-01-162-2372	Clevis assembly, type V	(20)
1670-01-162-2376	Extraction bracket assembly	(1)
1670-01-162-2381	Tandem link assembly (Multipurpose link)	(4)
5530-00-128-4981	Plywood, 3/4-in	3 sheets
1670-01-097-8816	Release, cargo parachute, M-1	1
	Sling, cargo, airdrop	
	For suspension:	
1670-01-063-7761	16-ft (2-loop), type XXVI nylon webbing	4
	For lifting:	
1670-01-062-6304	9-ft (2-loop), type XXVI nylon webbing	2
1670-01-062-6303	12-ft (2-loop), type XXVI nylon webbing	2
	For deployment:	
1670-01-062-6304	9-ft (2-loop), type XXVI nylon webbing	1
	For riser extension:	
1670-01-062-6302	20-ft (2-loop), type XXVI nylon webbing	2
5340-00-040-8219	Strap, parachute release, multi-cut, comes w/ 3 knives	2
7510-00-266-5016	Tape, adhesive, 2-in	As required
1670-00-937-0271	Tie-down assembly, 15-foot	19
1670-01-344-0825	Vehicle drive-off aid	1
	Webbing:	
8305-00-268-2411	Cotton, 1/4-in, type I	As required
8305-00-082-5752	Nylon, tubular, 1/2-in	As required
8305-00-263-3591	Type VIII	As required

CHAPTER 3

RIGGING ARMAMENT CARRIERS FOR LOW-VELOCITY AIRDROP

SECTION I - RIGGING CARRIERS ON A 16-FOOT PLATFORM

DESCRIPTION OF LOAD

3-1. The unrigged M1025 armament carrier (Figure 3-1) is described in Chapter 1. The truck is rigged on a 16-foot type V platform for low-velocity airdrop. An accompanying load weighing a minimum of 800 pounds and a maximum of 2,000 pounds must be rigged in the truck. The load requires two G-11 cargo parachutes.

The following trucks can be rigged using the procedures given in this chapter:
M1025A1, M1025A2, and M1025A2 modified
M1026, M1026 (modified) and M1026A1
M966 and M966A1
M1036
M1043, M1043A1, and M1043A2
M1044 and M1044A1
M1045, M1045A1, and M1045A2
M1046 and M1046A1
M1121

PREPARING PLATFORM

3-2. Prepare a 16-foot, type V airdrop platform using four tandem links and 18 load tie-down clevises as shown in Figure 2-2.

Notes: 1. The nose bumper may or may not be installed.
2. Measurements given in this chapter are from the front edge of the platform, NOT from the front edge of the nose bumper.

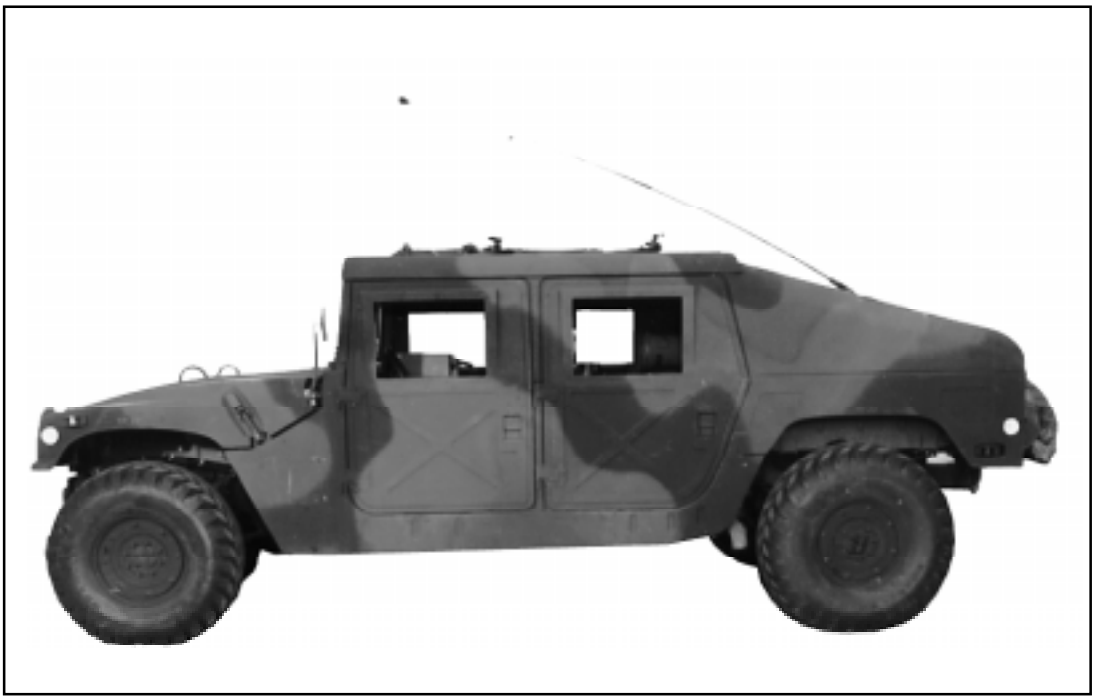

Figure 3-1. M1025 Armament Carrier

PREPARING AND POSITIONING HONEYCOMB STACKS

3-3. Prepare three honeycomb stacks as shown in Figures 2-3 and 2-4. Position the stacks on the platform as shown in Figure 2-5, and according to FM 4-20.102/TO 13C7-1-5.

PREPARING TRUCK

3-4. Prepare the truck as described in paragraphs 2-4a through e, g, and h, and as shown in Figures 2-6 and 2-7, 2-8 (omit steps 1 and 3), 2-9, 2-11, and 2-12. Further prepare the closed-body HMMWV as shown in Figures 3-2 and 3-3.

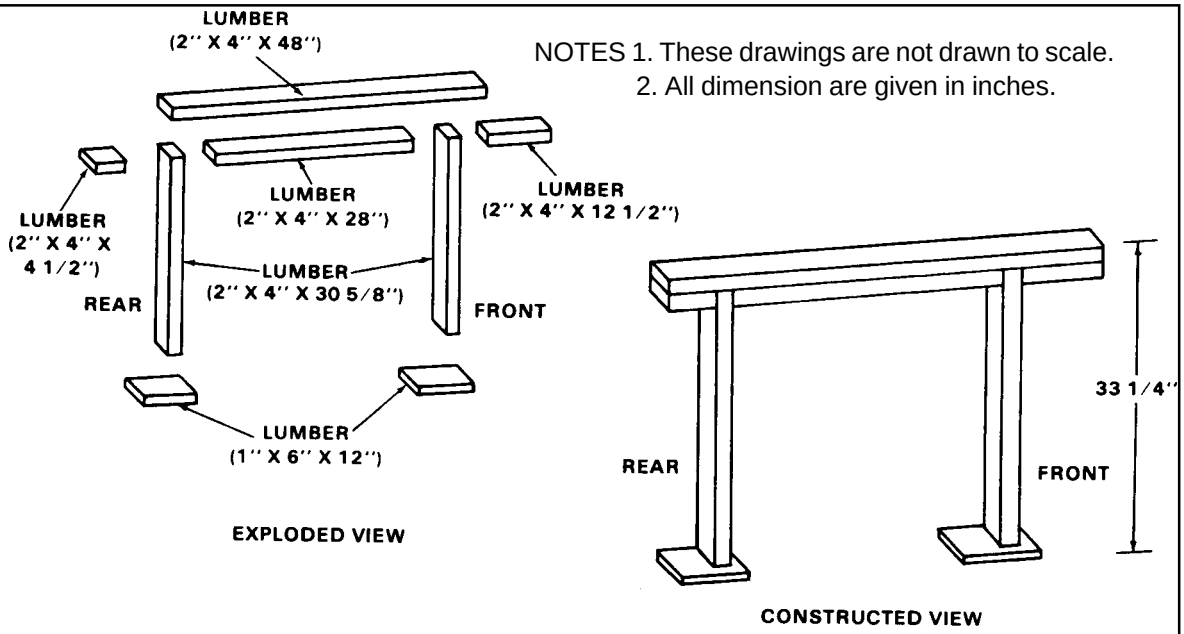

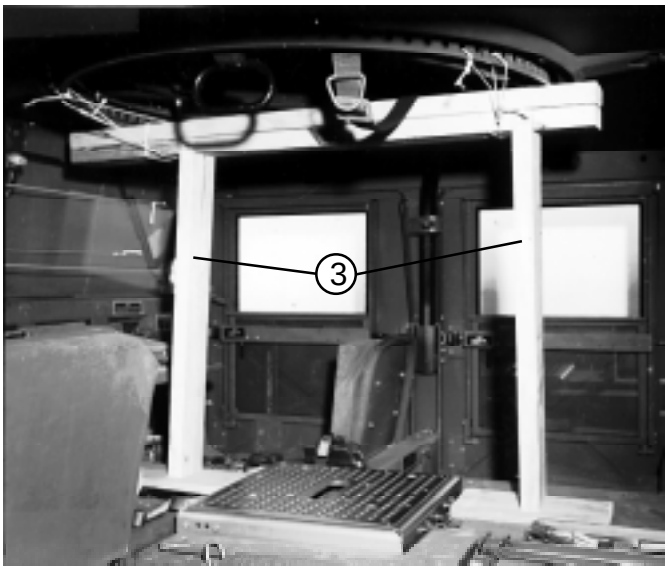

1. Build the turret housing support as shown. Nail the lumber together with 8d nails.
2. Close the turret cover and secure it with the fasteners provided (not shown).
3. Center the support under the turret housing with the front end of the support toward the front end of the truck. Tie the support in place with two lengths of type III nylon cord.

Figure 3-2. Turret Support Built and Placed

NOTES 1. These drawings are not to scale.
2. All dimension are given in inches.

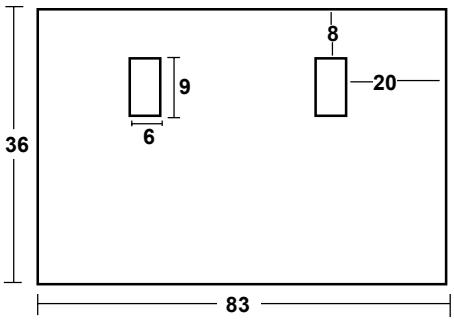

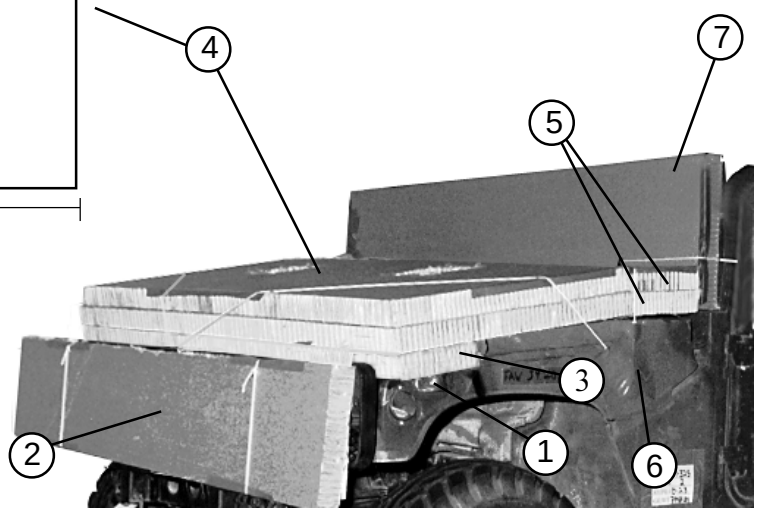

1. Tape all lights and reflectors.
2. On trucks equipped with the brush guard, cover the front side with a 83- by 14-inch piece of honeycomb tied in place with type III nylon cord.
3. Center a 78- by 4-inch piece of honeycomb along the front edge of the hood.
4. Place two 36- by 83-inch pieces of honeycomb, with cutouts as shown, over the hood. Tape the upper edges of the top piece. Tie the honeycomb in place with a length of type III nylon cord. Tie the cord to a hood latch, pass it through the grille, and tie off to the other hood latch.
5. Place two 83- by 12-inch pieces of honeycomb just behind the honeycomb placed in step 2 above. Tape the top outside edges. Secure the honeycomb to the hood latch brackets with type III nylon cord.
6. Tape the hood latches.
7. Lower all side windows and open the truck doors. Place a 21- by 83-inch piece of honeycomb against the windshield. Tie a length of type III nylon cord around the honeycomb and the inside of the windshield frame.

Figure 3-3. Truck Body Prepared

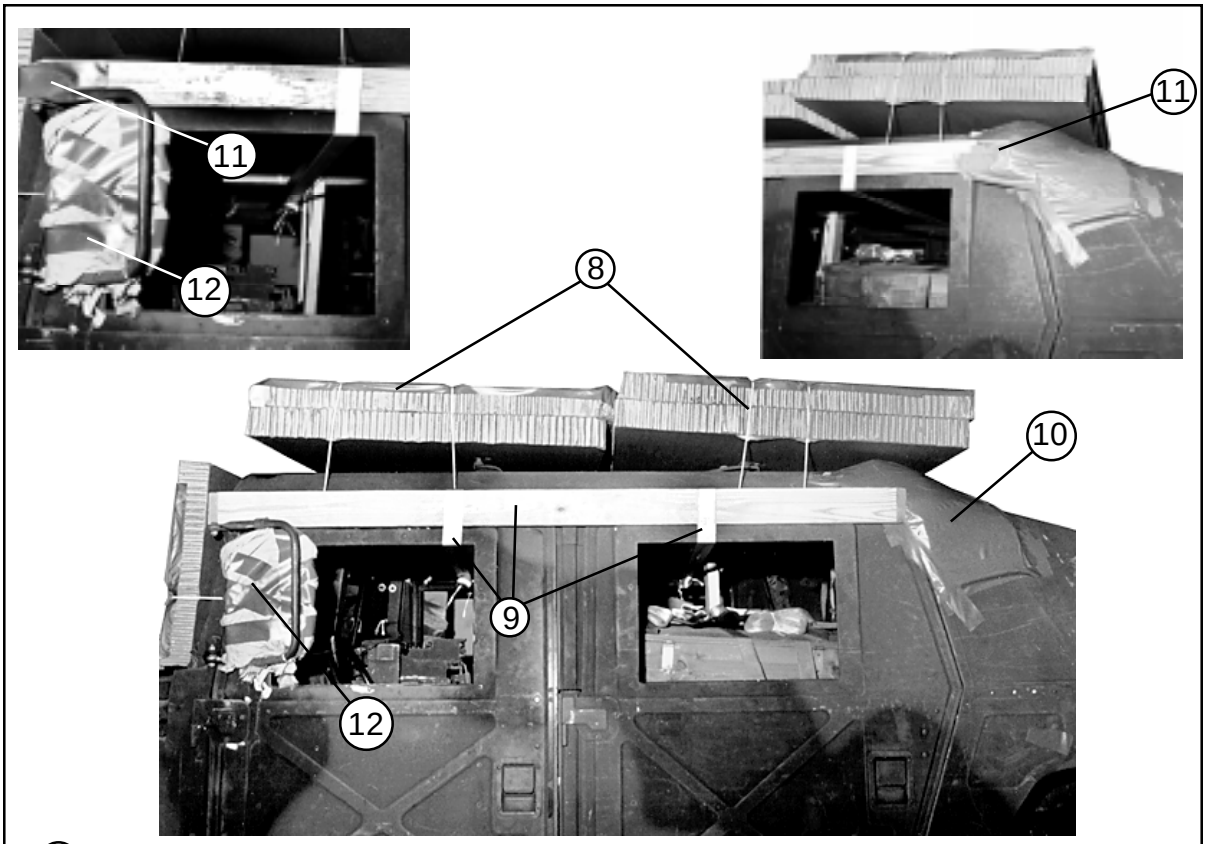

(8) Cover the roof with four 82- by 36-inch pieces of honeycomb. Tape the upper 36-inch edges. Tie four lengths of type III nylon cord over the honeycomb and through the door openings.

(9) Pass 15-foot lashings through the door openings on each side of the truck and close the doors. Cut a 45-degree bevel in each end of two pieces of 2- by 4- by 69 1/2-inch lumber. Rest the long side of each piece of lumber over the window openings and even with the front edge of the windshield frame. Pass the free ends of the lashings down over the lumber and through the windows. Secure the lashings inside the truck.

(10) Pad the upper rear corner of the door and the end of the rain gutter with a 12- by 12-inch piece of felt taped in place.

(11) Tape the front and rear ends of the lumber to the windshield frame and to the padding over the rear gutter.

(12) Pad the mirrors with cellulose wadding taped in place. Fold the mirrors inward and tie them together through the cab of the truck.

Figure 3-3. Truck Body Prepared (continued)

STOWING ACCOMPANYING LOAD

3-5. Stow an accompanying load of 800 to 2,000 pounds in the cargo area of the truck. Use or adapt the procedures shown in Figure 3-4. Make sure the accompanying load complies with the restrictions outlined in FM 4-20.102/TO 13C7-1-5. The maximum restraint capacity of each cargo area tie-down ring is 2,000 pounds. The accompanying load of ammunition shown in Figure 3-4 weighs 930 pounds.

CAUTION

Only ammunition listed in FM 10-500-53/MCRP4-3.81/TO 13C7-18-41 may be airdropped. Package, mark, and label hazardous material according to AFJMAN 24-204/TM 38-250.

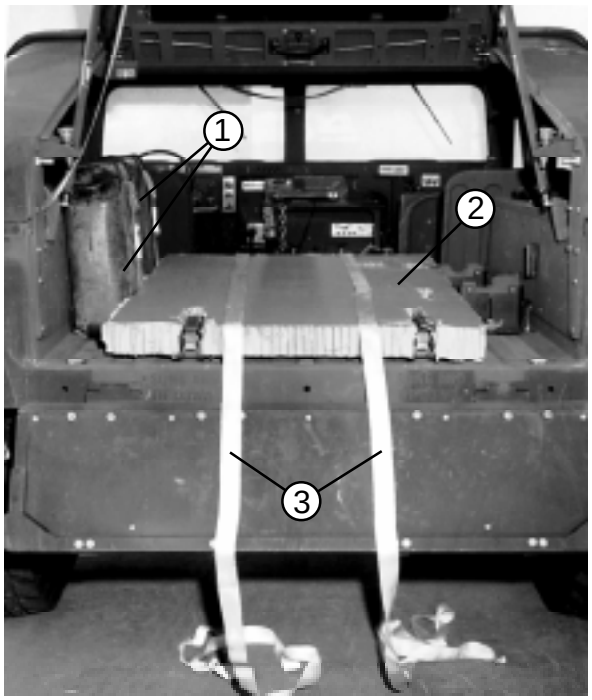

1. Stow two water cans in their holders, and secure them with the straps provided.
2. Lay a 36- by 50-inch piece of honeycomb in the cargo area. Make cutouts in the honeycomb for fixtures on the floor.
3. Lay two 15-foot lashings lengthwise on the honeycomb.

Figure 3-4. Accompanying load stowed in truck

4 Place the accompanying load (20-millimeter ammunition shown) on the honeycomb.

5 Fasten the pre-positioned lashings (step 3) on the front side of the boxes with D-rings and load binders.

6 Run a 15-foot lashing around the boxes through their carrying handles. Secure the lashing with a D-ring and a load binder.

Figure 3-4. Accompanying Load Stowed in Truck (continued)

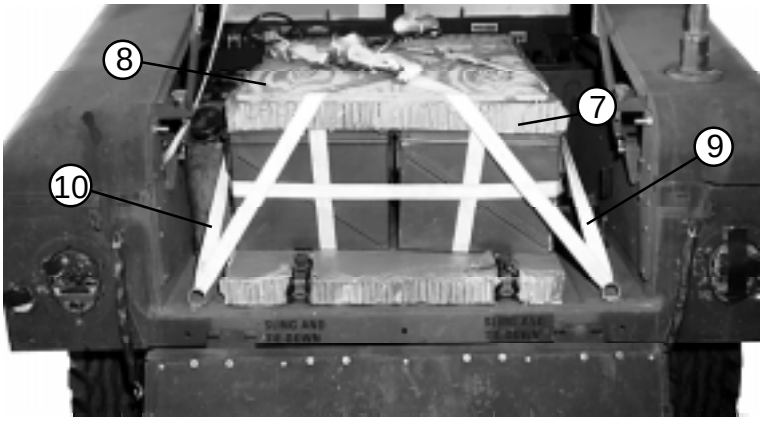

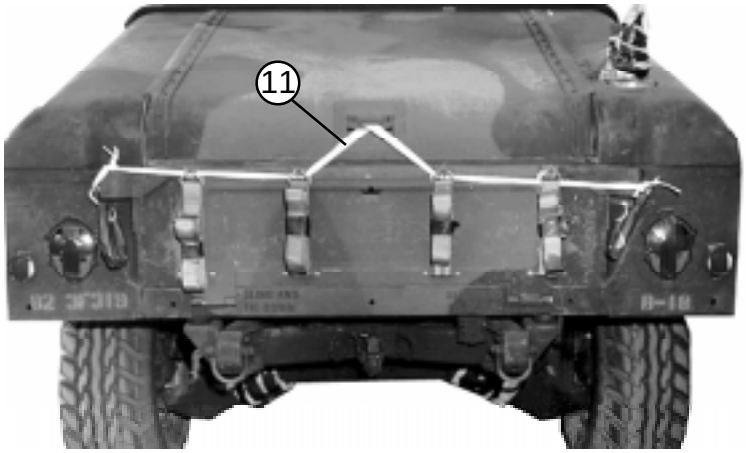

(7) Lay a 36- by 40-inch piece of honeycomb flush over the boxes of ammunition.

(8) Lay a 3/4- by 36- by 40-inch piece of plywood flush over the honeycomb.

(9) Run a 30-foot lashing through the right rear tie-down ring. Bring both ends over the boxes diagonally. Run the lashing through the left front tie-down ring. Secure the lashing over the load.

(10) Repeat step 9 using the left rear and right front tie-down rings.

Note: Stow truck equipment such as antennas on top of the load. Tie the equipment securely.

(11) Close and latch the tailgate and hatch. Fold and tape the cargo straps. Run a length of 1/2-inch tubular nylon webbing under the cargo straps and through the hatch cover handle. Tie to the tailgate hook brackets.

Figure 3-4. Accompanying Load Stowed in Truck (continued)

LIFTING AND POSITIONING TRUCK AND INSTALLING OPTIONAL DRIVE-OFF AIDS

3-6. Install the optional drive-off aids on the platform as shown in Figure 2-16. Install lifting slings on the truck and position the truck on the platform as shown in Figure 2-16. Attach the driveoff aids to the wheels as shown in Figure 2-17.

LASHING TRUCK

3-7. Lash the truck to the platform with fifteen 15-foot tie-down assemblies. Install the lashings according to FM 4-20.102/TO 13C7-1-5, and as shown in Figures 2-18 and 2-19.

INSTALLING AND SAFETY TYING SUSPENSION SLINGS

3-8. Install and safety tie four 16-foot (2-loop), type XXVI nylon suspension slings according to FM 4-20.102/TO 13C7-1-5, and as shown in Figure 3-5.

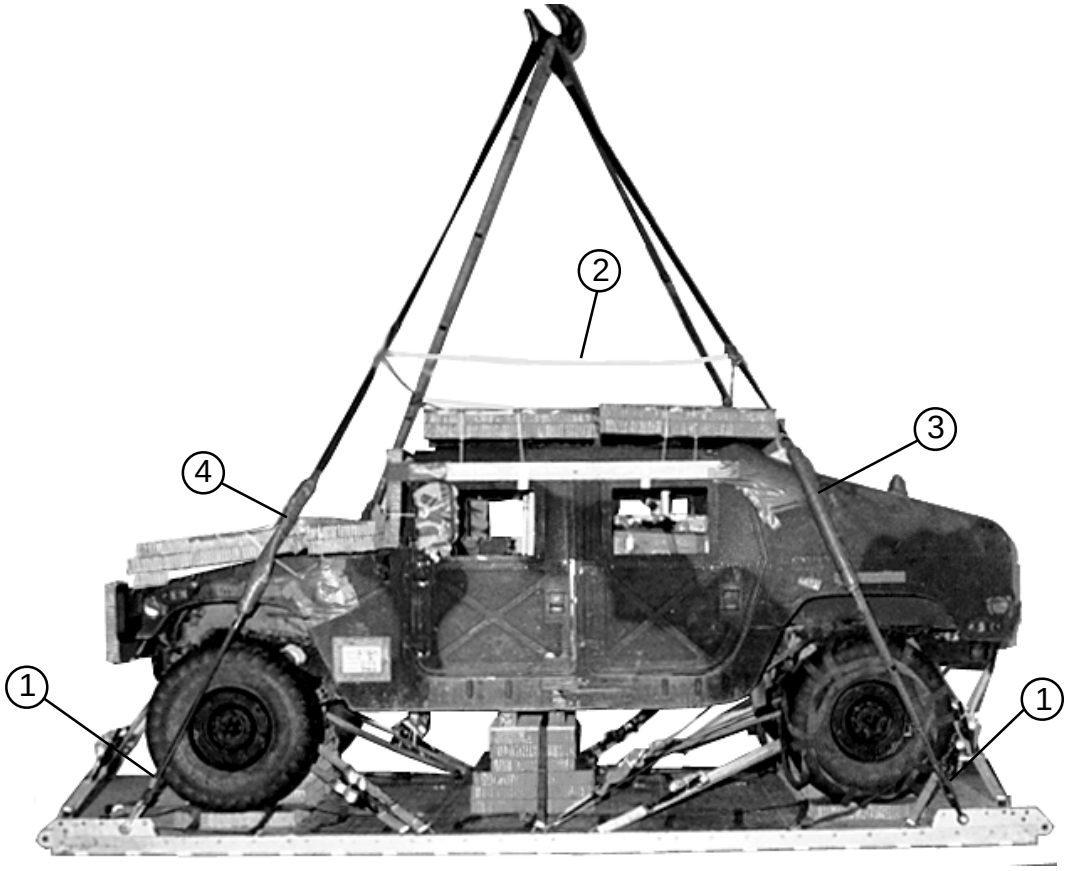

1. Attach a 16-foot (2-loop), type XXVI nylon suspension sling to each tandem link with a large clevis.
2. Raise the slings and install the deadman's tie 6 to 8 inches above the load.
3. Position a 6- by 36-inch piece of felt around each front suspension sling 40 inches from the suspension clevis. Cover the padding completely with tape, extending the tape 6 inches above and below the padding.
4. Position a 6- by 36-inch piece of felt around each rear suspension sling 45 inches from the suspension clevis. Secure the padding as described in step 3 above.

Figure 3-5. Suspension Slings Installed, Padded and Safety Tied

STOWING CARGO PARACHUTES

3-9. Use two G-11 cargo parachutes on this load. Stow the cargo parachutes according to FM 4-20.102/TO 13C7-1-5, and as shown in Figure 2-21.

INSTALLING PARACHUTE RELEASE

3-10. Prepare and install an M-1 cargo parachute release according to FM 4-20.102/TO 13C7-1-5, and as shown in Figure 3-6.

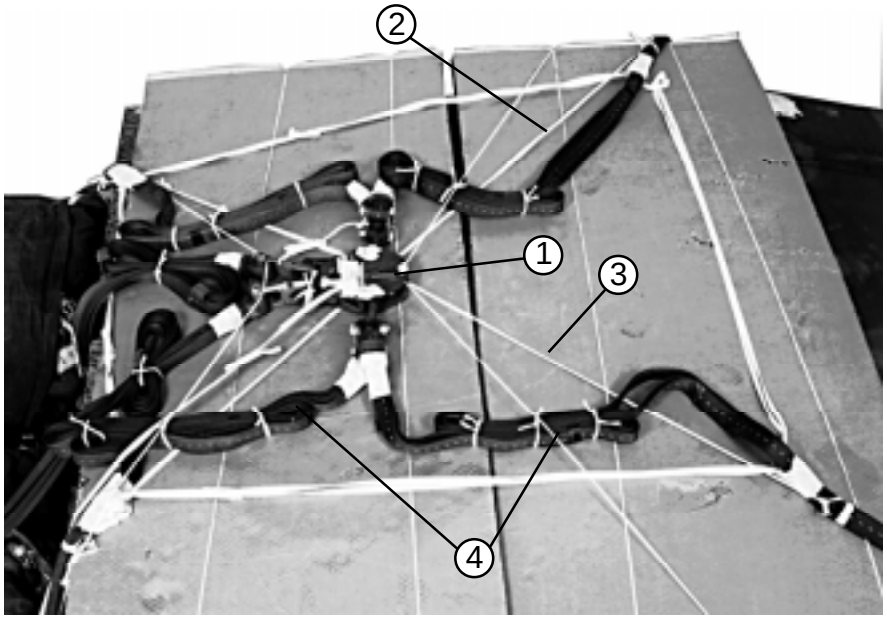

1. Place the M-1 release on the honeycomb in front of the parachutes. Tie the release to convenient points on the load.
2. Tie a length of Type I, 1/4-inch cotton webbing to the right rear suspension sling below the deadman's tie. Bring the webbing diagonally over the load to the left front. Pull it taut, and tie it to the left front sling below the deadman's tie.
3. Tie the left rear and right front suspension slings together in the same way as outlined in step 2 above.
4. S-fold the slack in the suspension slings, and tie the folds with Type I, 1/4-inch cotton webbing. Attach the suspension slings and the riser extensions to the release.

Figure 3-6. M-1 Cargo Parachute Release Installed

INSTALLING EXTRACTION SYSTEM

3-11. Install the EFTC extraction system with a 16-foot release cable according to FM 4-20.102/TO 13C7-1-5, and as shown in Figure 2-23.

INSTALLING PROVISIONS FOR EMERGENCY RESTRAINTS

3-12. Install the provisions for emergency restraints on the load according to FM 4-20.102/TO 13C7-1-5.

PLACING EXTRACTION PARACHUTE

3-13. Select the extraction parachute and extraction line needed using the extraction line requirements table in FM 4-20.102/TO 13C7-1-5. Rig the extraction line in an extraction line bag according to TM 10-1670-286-20/TO 13C5-2-41. Place the extraction parachute and extraction line on the load for installation in the aircraft.

MARKING RIGGED LOAD

3-14. Mark the rigged load according to FM 4-20.102/TO 13C7-1-5, and as shown in Figure 3-7. Complete Shipper's Declaration for Dangerous Goods according to AFJMAN 24-204/TM 38-250. If the load varies from the one shown, the weight, height, CB, and parachute requirements must be recomputed.

EQUIPMENT REQUIRED

3-15. Use the equipment listed in Table 3-1 to rig this load. The equipment for rigging the accompanying load is NOT given in Table 3-1.

CAUTION
Make the final rigger inspection required by FM 4-20.102/ TO 13C7-1-5 before the load leaves the rigging site.

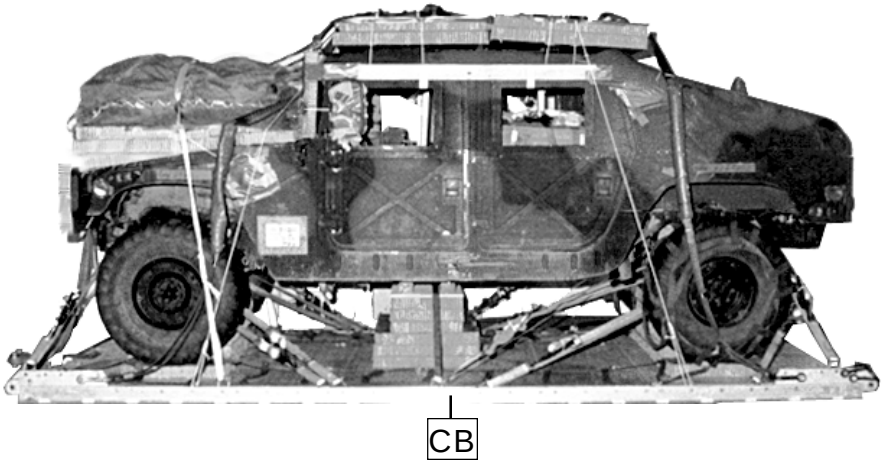

RIGGED LOAD DATA

Weight: Load shown ..... 9,820 pounds
Maximum load allowed ..... 10,500 pounds
Height (with two G-11 parachutes) ..... 91 inches
Width..... ..... 108 inches
Length (overall) ..... 215 inches
Overhang: Front ..... 0 inches
Rear (EFTC).....18 inches
CB (from front edge of platform) ..... 96 inches

Figure 3-7. M1025 Armament Carrier Rigged for Low-Velocity Airdrop on a 16-Foot Platform

Table 3-1. Equipment Required for Rigging Armament Carrier on a 16-Foot Platform

National Stock Number	Item	Quantity
8040-00-273-8713	Adhesive, paste, 1-gal	As required
4030-00-090-5354	Clevis, suspension, 1-in (large)	5
4020-00-240-2146	Cord, nylon, type III, 550-lb	As required
1670-00-434-5785	Coupling assembly, airdrop, extraction force transfer with cable, 16-ft	1
	Cover:	
1670-00-360-0328	Clevis, large	1
8135-00-664-6958	Cushioning material, packaging, cellulose wadding	As required
8305-00-958-3685	Felt, 1/2-in thick	As required
1670-01-183-2678	Leaf, extraction line (line bag)	2
	Line, drogue (for C-17)	
1670-01-064-4452	60-ft (1-loop), type XXVI	1
	Line, extraction:	
1670-01-062-6313	For C-130: 60-ft (3-loop), type XXVI	1
1670-01-107-7651	For C-141: 140-ft (3-loop), type XXVI	1
	For C-5:	
1670-01-062-6313	60-ft, (3-loop), type XXVI and	1
1670-01-107-7651	140-ft (3-loop), type XXVI	1
	For C-17:	
1670-01-107-7651	140-ft (3-loop), type XXVI	1
	Link Assembly:	1
5306-00-435-8994	Two-point:	(2)
5310-00-232-5165	Bolt, 1-in diam, 4-in long	(2)
1670-00-003-1953	Nut, 1-in, hexagonal	(2)
5365-00-007-3414	Plate, side, 3 3/4-in	(2)
	Spacer, large	
	Lumber:	
5510-00-220-6146	2- by 4-in	As required
5510-00-220-6448	2- by 6-in	As required
5510-00-220-6274	4- by 4-in	As required
5315-00-010-4659	Nail, steel wire, 8d	As required

Table 3-1. Equipment Required for Rigging Armament Carrier on a 16-Foot Platform (continued)

National Stock Number	Item	Quantity
1670-00-753-3928	Pad, energy-dissipating (honeycomb) 3- by 36- by 96-in	13 sheets
	Parachute:	
	Cargo:	
1670-01-016-7841	G-11B	2
	Cargo extraction:	
1670-01-063-3716	22-ft (Use with H-block for C-17.)	1
	Drogue (for C-17)	
1670-01-063-3715	15-ft	1
	Platform, airdrop, type V, 16-ft	
1670-01-353-8425	Bracket assembly, coupling	(1)
1670-01-162-2372	Clevis assembly, type V	(20)
1670-01-162-2376	Extraction bracket assembly	(1)
1670-01-162-2381	Tandem link assembly (Multipurpose link)	(4)
5530-00-128-4981	Plywood, 3/4-in	3 sheets
1670-01-097-8816	Release, cargo parachute, M-1	1
	Sling, cargo, airdrop	
	For suspension:	
1670-01-063-7761	16-ft (2-loop), type XXVI nylon webbing	4
	For lifting:	
1670-01-062-6304	9-ft (2-loop), type XXVI nylon webbing	2
1670-01-062-6303	12-ft (2-loop), type XXVI nylon webbing	2
	For deployment:	
1670-01-062-6304	9-ft (2-loop), type XXVI nylon webbing	1
	For riser extension:	
1670-01-062-6302	20-ft (2-loop), type XXVI nylon webbing	2
5340-00-040-8219	Strap, parachute release, multi-cut, comes w/ 3 knives	2
7510-00-266-5016	Tape, adhesive, 2-in	As required
1670-00-937-0271	Tie-down assembly, 15-foot	21
1670-01-344-0825	Vehicle drive-off aid	1
	Webbing:	
8305-00-268-2411	Cotton, 1/4-in, type I	As required
8305-00-082-5752		As required
8305-00-263-3591		As required

SECTION II - RIGGING CARRIERS ON A 20-FOOT PLATFORM WITH ADDITIONAL ACCOMPANYING AMMUNITION LOAD

DESCRIPTION OF LOAD

3-16. The unrigged M1025 armament carrier (Figure 3-1) is described in Chapter 1. The truck and an accompanying load are rigged on a 20-foot type V platform for low-velocity airdrop. A load weighing a minimum of 800 pounds and a maximum of 2,000 pounds must be rigged in the truck. The load requires three G-11 cargo parachutes. The armament carriers listed on page 3-1 can be rigged using the procedures in this section.

PREPARING PLATFORM

3-17. Prepare a 20-foot, type V airdrop platform according to TM 10-1670-268-20&P/TO 13C7-52-22. Install four tandem links, two suspension links and 32 load tie-down clevises as shown in Figure 3-8.

Notes: 1. The nose bumper may or may not be installed.
2. Measurements given in this chapter are from the front edge of the platform, NOT from the front edge of the nose bumper.

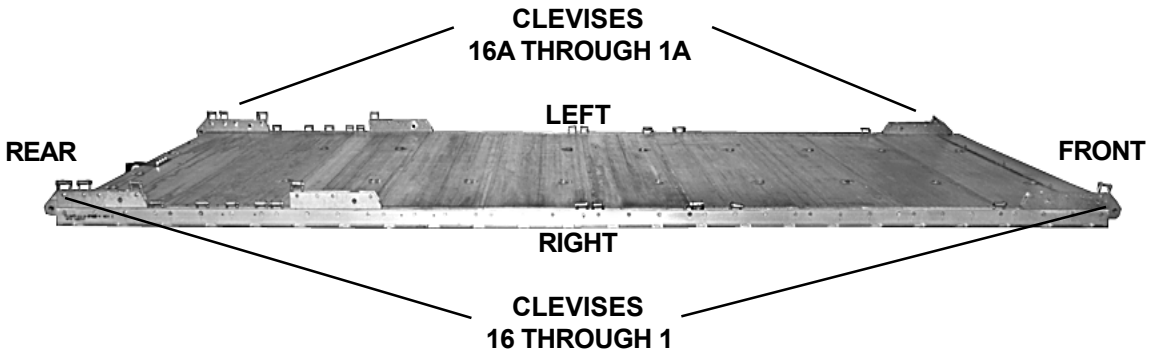

Step:

1. Install a tandem link on the front of each platform side rail using holes 1, 2, and 3.
2. Install a suspension link to each platform side rail using holes 29, 30, and 31.
3. Install a tandem link on the rear of each platform side rail using holes 38, 39, and 40.
4. Install a clevis on bushing 1of each front tandem link.
5. Install a clevis on bushing 4 of each suspension link.
6. Install clevises on bushings 1, 3 and 4 of each rear tandem link.
7. Starting at the front of the platform, install clevises on each platform side rail using the bushings bolted on holes 5, 15, 20, 21, 32, 33, 34, 35, and 37.
8. Install a clevis on bushing 17 in an inverted position. Install a bushing on clevis 17A in the normal position. Bolt an additional clevis to each of the clevises bolted to the 17th bushings.
9. Starting at the front of the platform, number the clevises bolted to the right side of the platform from 1 through 16, and those bolted to the left side from 1A through 16A. Number the clevises installed on the 17th bushings 5 and 5A. Number the clevises bolted to these clevises 4 and 4A.
10. Label the tie-down rings according to FM 4-20.102/TO 13C7-1-5.

Figure 3-8. Platform Prepared

PREPARING AND POSITIONING HONEYCOMB STACKS

3-18. Prepare honeycomb stacks 1 through 3 as shown in Figures 2-3 and 2-4. Glue two 36- by 60-inch pieces of honeycomb flush together to make stack 4. Position the stacks on the platform as shown in Figure 3-9, and according to FM 4-20.102/TO 13C7-1-5.

Notes: 1. This drawing is not drawn to scale.
2. All dimensions are in inches.

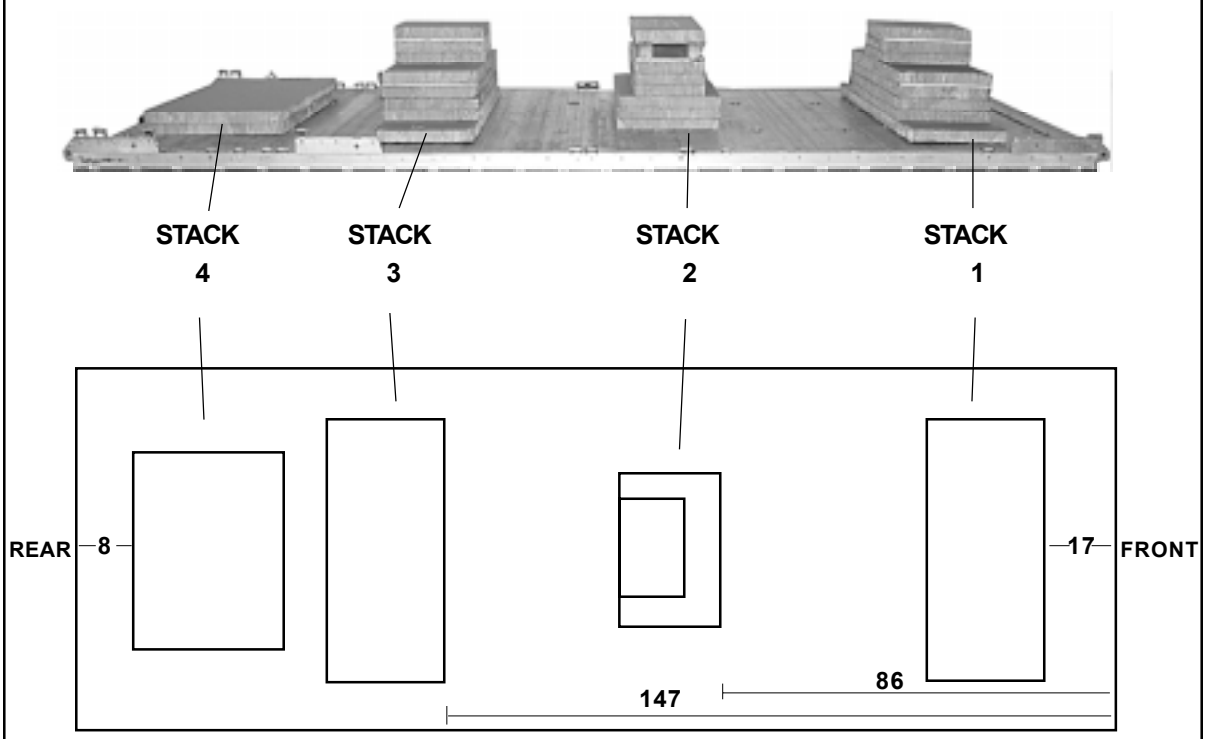

Stack Number	Position of Stack on Platform
	Place stack:
1	17 inches from the front edge of the platform and centered.
2	86 inches from the front edge of the platform and centered. Face the cutout to the rear.
3	147 inches from the front edge of the platform and centered.
4	8 inches from the rear edge of the platform and centered.

Figure 3-9. Honeycomb Stacks Positioned on Platform

RIGGING ACCOMPANYING LOADS ON THE PLATFORM AND IN THE TRUCK

3-19. The accompanying load shown is fourteen boxes of 20-millimeter ammunition. Any load of similar weight and configuration can be rigged on the platform. Rig this accompanying load on the platform as shown in Figure 3-10.

CAUTION
Only ammunition listed in FM 10-500-53/MCRP 4-3.81/ TO 13C7-18-41 may be airdropped. Package, mark and label hazardous material according to AFJMAN 24-204/TM 38-250.

Rig an accompanying load in the truck as shown in Section I of this chapter. Chapter 5 shows specific accompanying loads. Make sure any accompanying loads meet the restrictions and requirements as outlined in FM 4-20.102/TO 13C7-1-5.

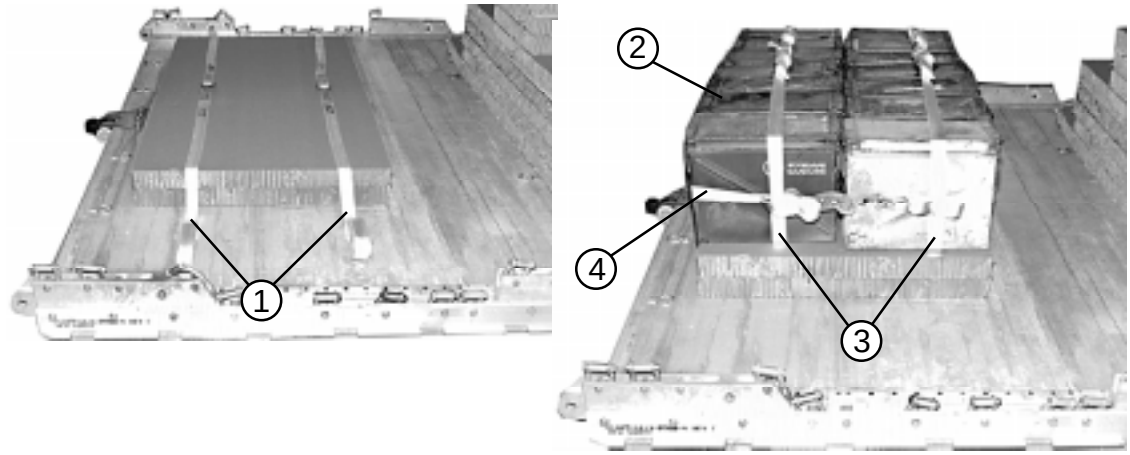

1. Form two 30-foot lashings according to FM 4-20.102/TO 13C7-1-5. Lay them from side to side on the honeycomb as shown.
2. Set 14 boxes of 20-millimeter ammunition on top of the lashings and honeycomb.
3. Secure the 30-foot lashings placed in step 1 on top of the boxes with D-rings and load binders.
4. Run a 30-foot lashing around the boxes, passing it through the box carrying handles. Secure the lashing with D-rings and a load binder on the side.

Figure 3-10. Accompanying Load Stowed on Platform

1. This drawing is not drawn to scale.
2. All dimensions are in inches.

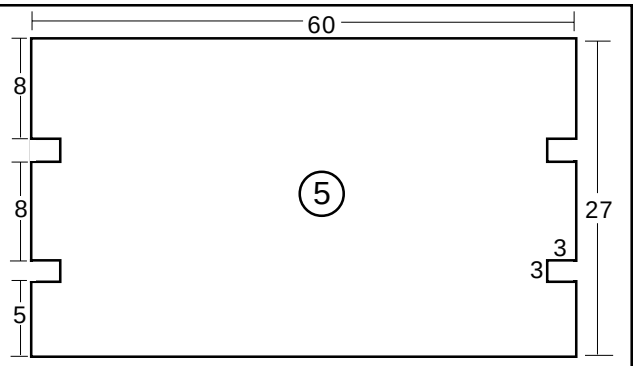

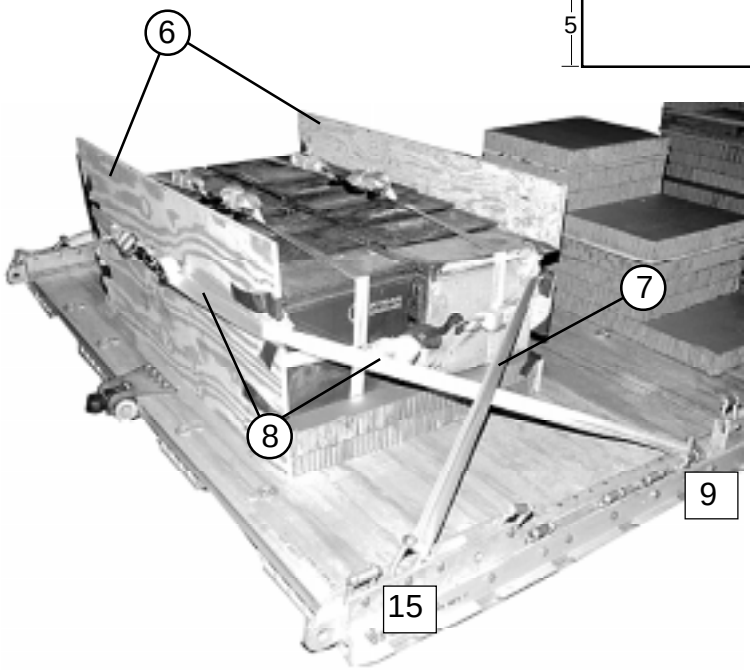

(5) Construct two endboards of 3/4- by 27- by 60-inch plywood as shown.

(6) Center an endboard against each end of the stack. Pad the cutouts with cellulose wadding taped in place.

(7) Center a 30-foot lashing on the front endboard and pass the ends through the upper slots. Pass the lashing through clevises 15 and 15A and bring the ends back through the upper slots in the front endboard. Secure the lashing against the front endboard with two D-rings and a load binder.

(8) Center a 30-foot lashing on the rear endboard and pass the ends through the upper slots. Pass the lashing through clevises 9 and 9A and bring the ends back through the upper slots in the rear endboard. Secure the lashing against the rear endboard with two D-rings and a load binder.

Figure 3-10. Accompanying Load Stowed on Platform (continued)

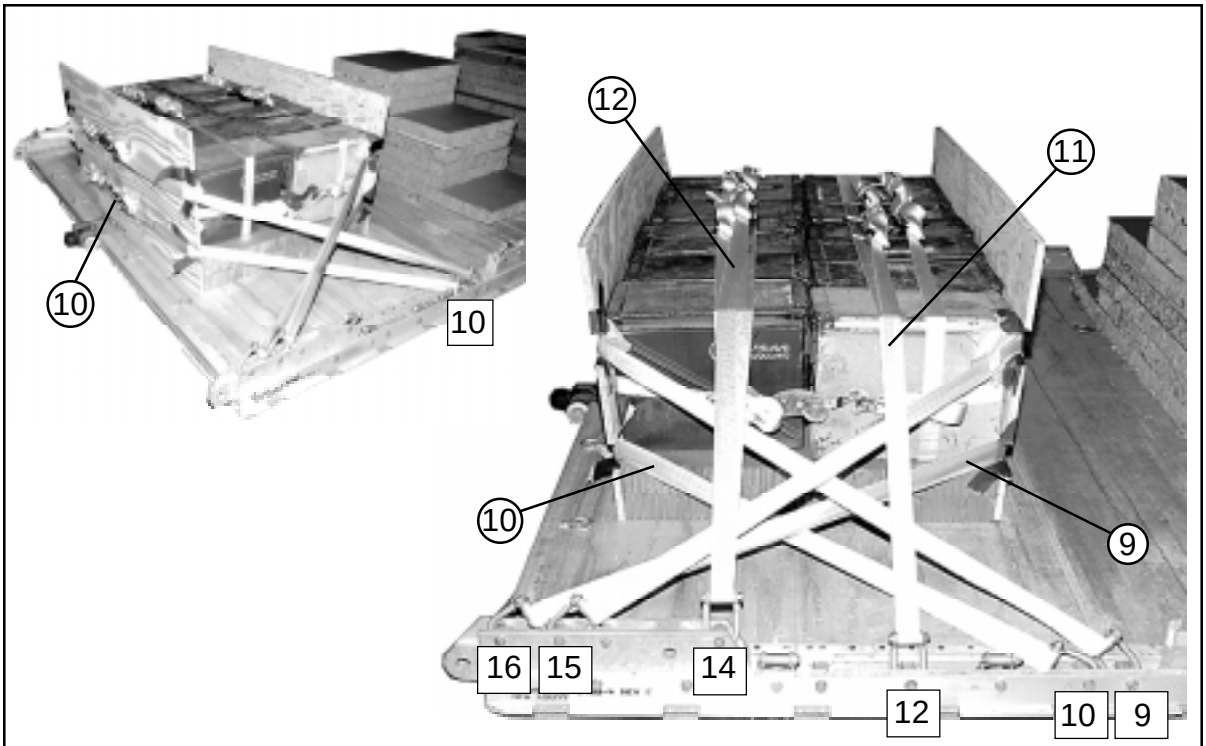

(9) Center a 30-foot lashing on the front endboard and pass the ends through the lower slots. Pass the lashing through clevises 16 and 16A and bring the ends back through the lower slots in the front endboard. Secure the lashing against the front endboard with two D-rings and a load binder.

(10) Center a 30-foot lashing on the rear endboard and pass the ends through the lower slots. Pass the lashing through clevises10 and 10A and bring the ends back through the lower slots in the rear endboard. Secure the lashing against the rear endboard with two D-rings and a load binder.

(11) Center a 30-foot lashing on top of the boxes. Pass the ends of the lashing through clevises 12 and 12A, and back over to the tops of the boxes. Secure the lashing with two D-rings and a load binder.

(12) Center a 30-foot lashing on top of the boxes. Pass the ends of the lashing through clevises 14 and 14A, and back over to the tops of the boxes. Secure the lashing with two D-rings and a load binder.

Figure 3-10. Accompanying Load Stowed on Platform (continued)

PREPARING TRUCK

3-20. Prepare the truck as described in paragraphs 2-4a through e, g, and h, and as shown in Figures 2-6 and 2-7, 2-8 (omit steps 1 and 3), 2-9, 2-11, and 2-12. Further prepare the closed-body HMMWV as shown in Figures 3-2 and 3-3 (omit step 3).

INSTALLING OPTIONAL DRIVE-OFF AIDS ON PLATFORM

3-21. Install the optional drive-off aids on the platform as shown in Figure 3-11.

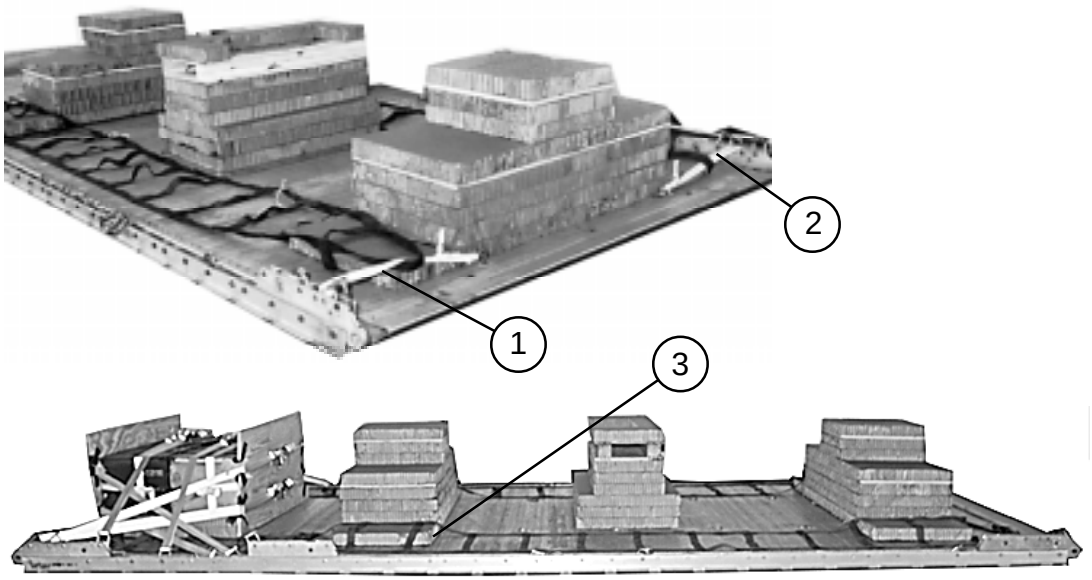

1. Pass a 45-inch length of type V or 1-inch tubular nylon webbing through tie-down ring A1, through the end loop of a drive-off aid, and around the second bushing of the right tandem link. Knot the webbing according to FM 4-20.102/TO 13C7-1-5.

2. Repeat step 1 for the left side, using tie-down ring B1 and the second bushing of the left tandem link.

3. Extend the drive-off aids to the rear, over stacks 1 and 3. Secure the drive-off aids to bushings and clevises with type I, 1/4-inch cotton webbing.

Figure 3-11. Drive-off Aids Installed on Platform

LIFTING AND POSITIONING TRUCK AND INSTALLING OPTIONAL DRIVE-OFF AIDS

3-22. Install lifting slings on the truck as shown in Figure 2-16. Position the truck on the platform as shown in Figure 3-12. Adapt the procedures in Figure 2-17 to install the drive-off aids to the front wheels of the truck.

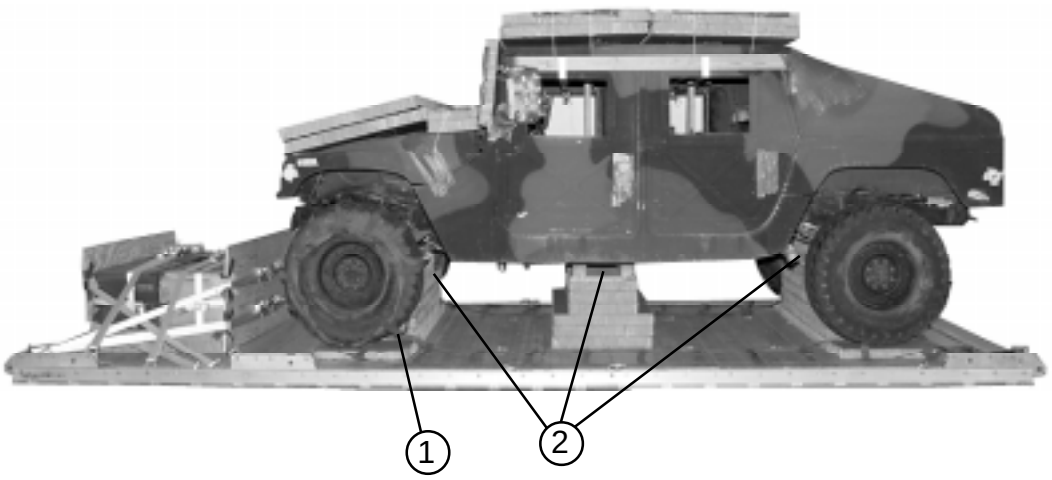

1. Lift the truck onto the honeycomb stacks so that the rear of the truck is aligned with the front edge of the platform. Wrap the drive-off aids around the front wheels before setting the truck down on the honeycomb stacks.

2. Be sure that the suspension cross members rest securely on stacks 1and 3. Be sure that the frame cross member rests securely on the 6-inch part of the honeycomb at the top of stack 2.

Figure 3- 12. Truck Positioned on Platform

LASHING TRUCK

3-23. Lash the truck to the platform with fifteen15-foot tie-down assemblies. Install the lashings according to FM 4-20.102/TO 13C7-1-5, and as shown in Figures 3-13 and 3-14.

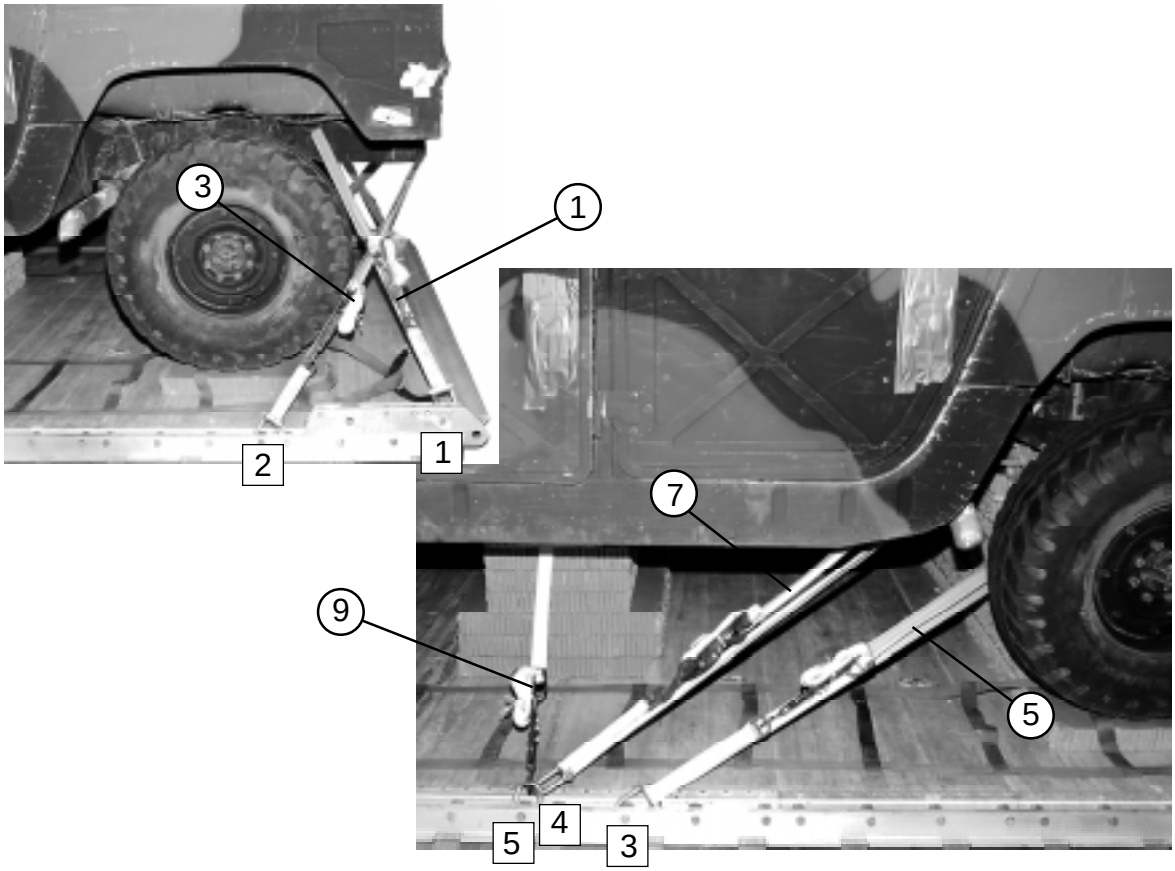

Lashing Number	**Tie-down** Clevis Number	**Instructions**
		Pass lashing:
1	1	Through tie-down bracket behind left rear coil spring.
2	1A	Through tie-down bracket behind right rear coil spring.
3	2	Through left rear lifting shackle.
4	2A	Through right rear lifting shackle.
5	3	Around left rear lower control arm.
6	3A	Around right rear lower control arm.
7	4	Through tie-down bracket in front of left rear coil spring.
8	4A	Through tie-down bracket in front of right rear coil spring.
9	5 and 5A	Pass a 15-foot lashing through clevis 5A and through its own D-ring. Pass the lashing through the hole in stack 2. Attach the lashing to clevis 5 with a load binder.

Figure 3-13. Lashings 1 Through 9 Installed

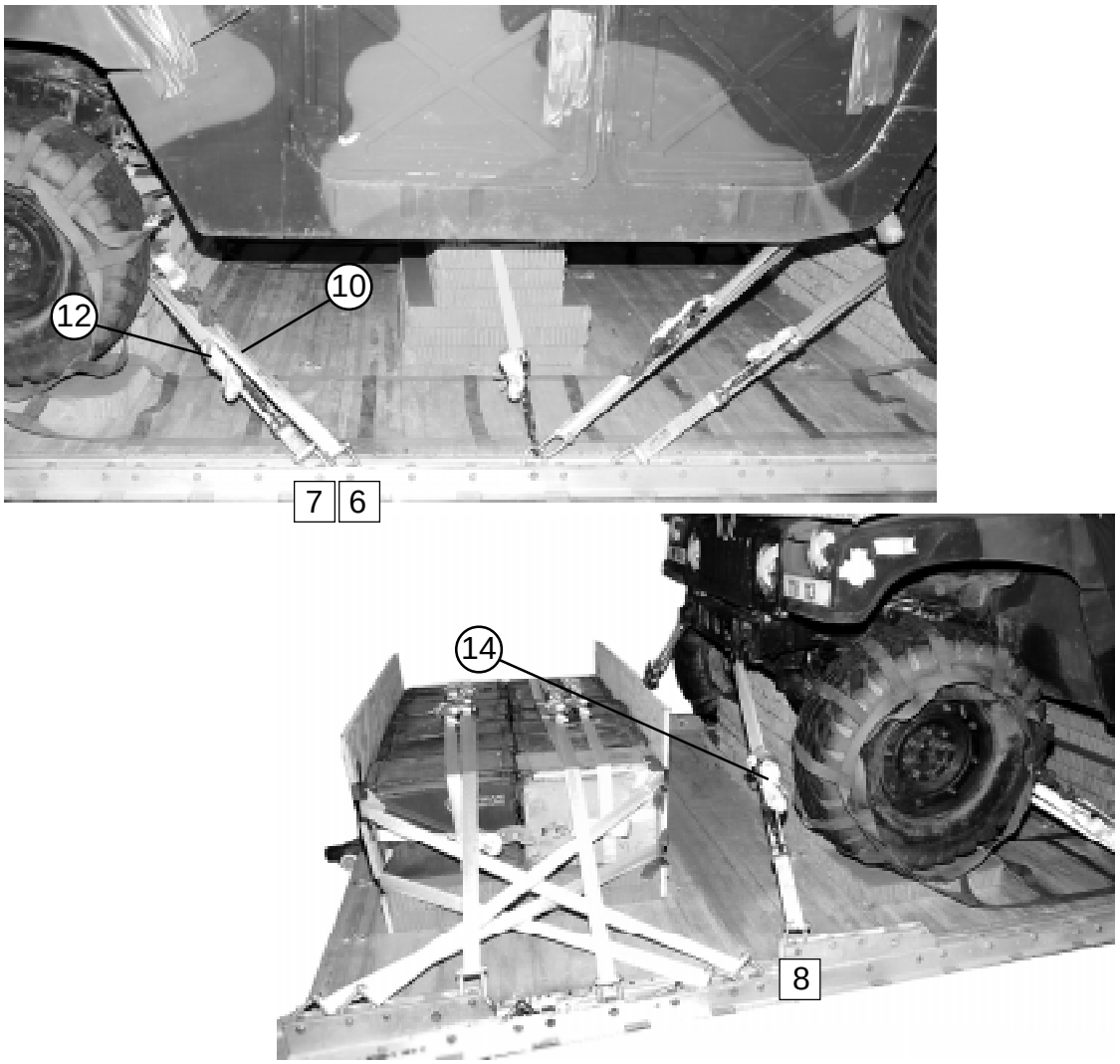

Lashing Number	**Tie-down** Clevis Number	**Instructions**
		Pass lashing:
10	6	Through tie-down bracket behind left front coil spring.
11	6A	Through tie-down bracket behind right front coil spring.
12	7	Around left lower control arm.
13	7A	Around right lower control arm.
14	8	Through tie-down bracket on end of left frame rail.
15	8A	Through tie-down bracket on end of right frame rail.

Figure 3-14. Lashings 10 Through 15 Installed

INSTALLING AND SAFETY TYING SUSPENSION SLINGS

3-24. Install, pad and safety tie the suspension slings according to FM 4-20.102/ TO 13C7-1-5, and as shown in Figure 3-15.

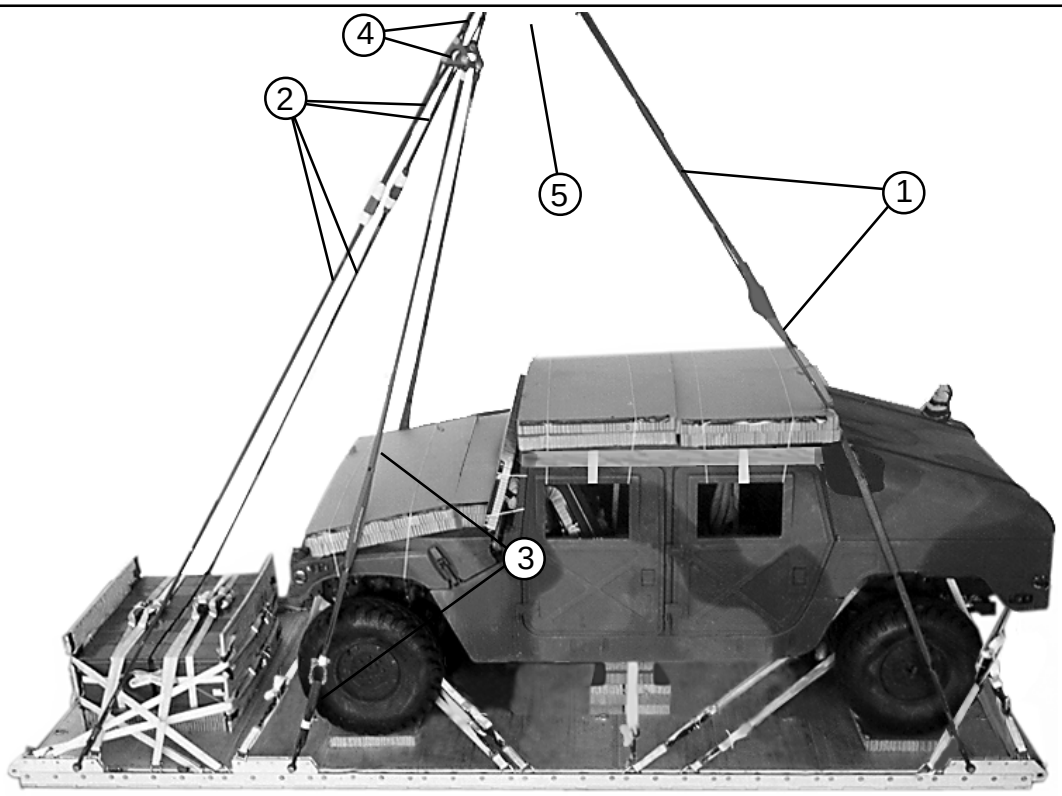

1. Attach a 9-foot (2-loop), type XXVI nylon sling to each front tandem link with a large clevis. Join a second 9-foot (2-loop) type XXVI nylon sling to each front suspension sling with a 3 3/4-inch two-point link. Pad the link with felt taped in place.

2. Attach a 12-foot (2-loop), type XXVI nylon sling to each rear tandem link with a large clevis. Join a 3-foot, (2-loop), Type XXVI nylon sling to the 12-foot sling with a 3 3/4-inch two point link. Pad the link with felt taped in place.

3. Place both ends of a 3-foot (2-loop), type XXVI nylon sling in the bell of a large clevis. Bolt the clevis to the suspension link. Join a 12-foot (2-loop), type XXVI nylon sling to the 3-foot sling with a large clevis, placing the bell of the clevis in the 3-foot sling. Repeat for the left side.

4. Join the center and rear suspension slings together at their free ends with a three-point link. Attach a 3-foot (2-loop), Type XXVI nylon sling to the remaining point of the 3-point link on each side.

5. Attach the front, center, and rear suspension slings to the crane hook and pull the slings taut.

Figure 3-15. Suspension Slings Installed, Padded and Safety Tied

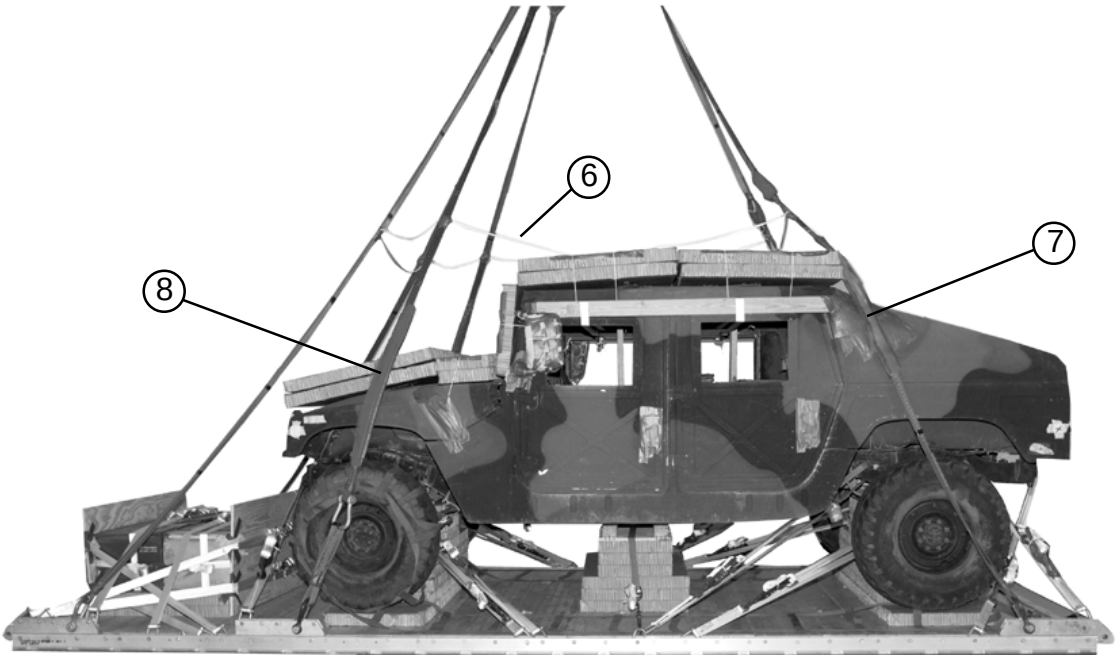

6 Safety tie the suspension slings with the deadman's tie according to FM 4-20.102/TO 13C7-1-5.

7 Wrap the front suspension slings with a layer of felt from 64 to 96 inches above the platform. Tape the felt in place. Extend the tape 3 inches beyond the ends of the felt.

8 Use the procedure given in step 7 above to pad the center suspension slings from 38 to 74 inches above the platform.

Figure 3-15. Suspension Slings Installed, Padded and Safety Tied (continued)

STOWING CARGO PARACHUTES

3-25. Use three G-11 cargo parachutes on this load. Stow the cargo parachutes according to FM 4-20.102/TO 13C7-1-5, and as shown in Figure 3-16.

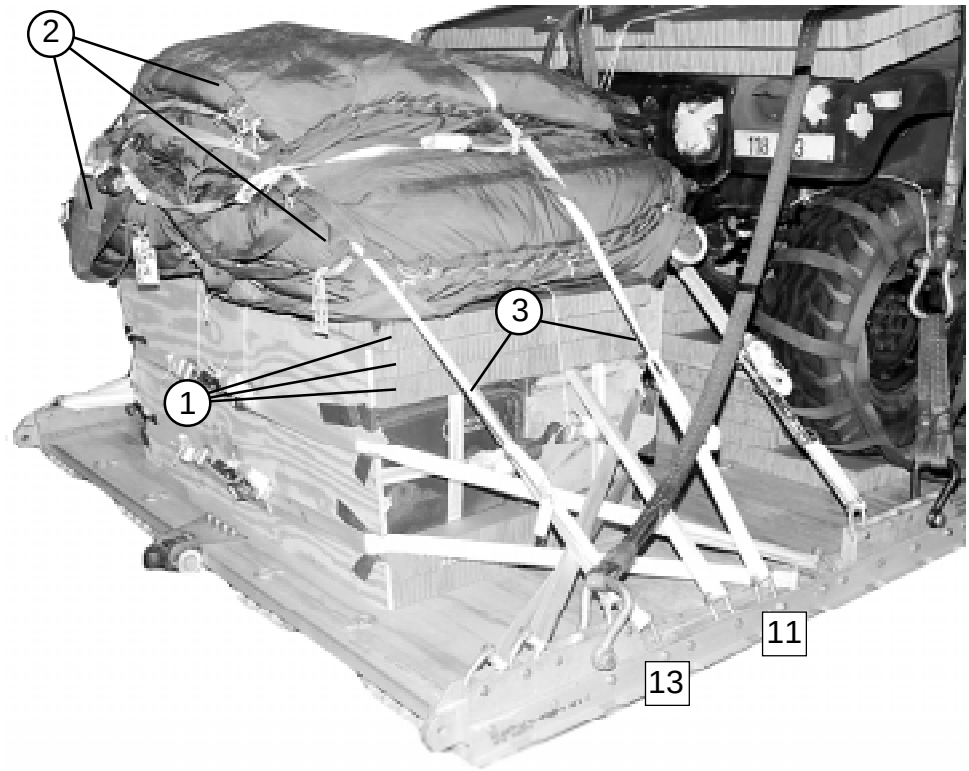

1. Secure three 30- by 60-inch pieces of honeycomb flush over the boxes with type III nylon cord.
2. Place and cluster three G-11 cargo parachutes on the honeycomb accordingto FM 4-20.102/TO 13C7-1-5.
3. Tie the restraint straps to clevises 11 and 11A, and to clevises 13 and 13A. Install the parachute release knives and straps according to FM 4-20.102/TO 13C7-1-5.

Figure 3-16. Cargo Parachutes Stowed

INSTALLING PARACHUTE RELEASE

3-26. Prepare and install an M-1 cargo parachute release according to FM 4-20.102/TO 13C7-1-5, and as shown in Figure 3-17.

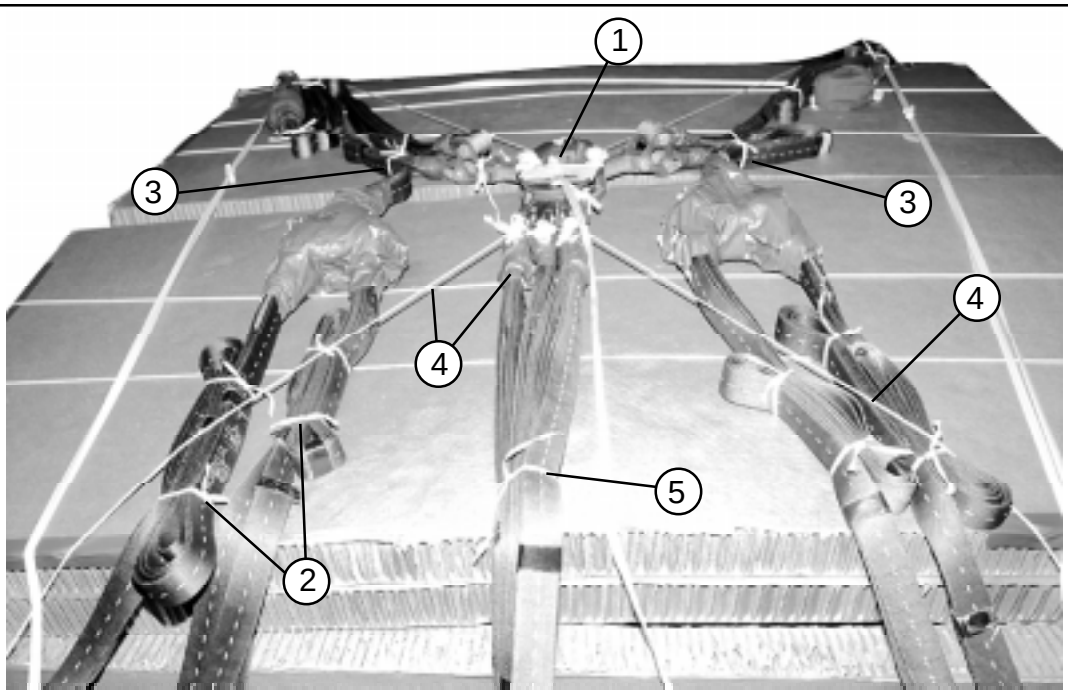

1. Center the M-1 release on the truck roof.
2. S-fold the slack in the rear and center suspension slings. Tie the folds with type III nylon cord.
3. S-fold the slack in the front suspension slings, and tie the folds with type I, 1/4-inch cotton webbing. Tie the front and rear suspension slings together with type I, 1/4-inch cotton webbing.
4. Attach the suspension slings and the riser extensions to the release. Tie the release to convenient points on the load with type III nylon cord tied over the suspension slings.
5. Tie the riser extensions together with type I, 1/4-inch cotton webbing.

Figure 3-17 . M-1 Cargo Parachute Release Installed

INSTALLING EXTRACTION SYSTEM

3-27. Install the EFTC extraction system according to FM 4-20.102/TO 13C7-1-5, and as shown in Figure 3-18.

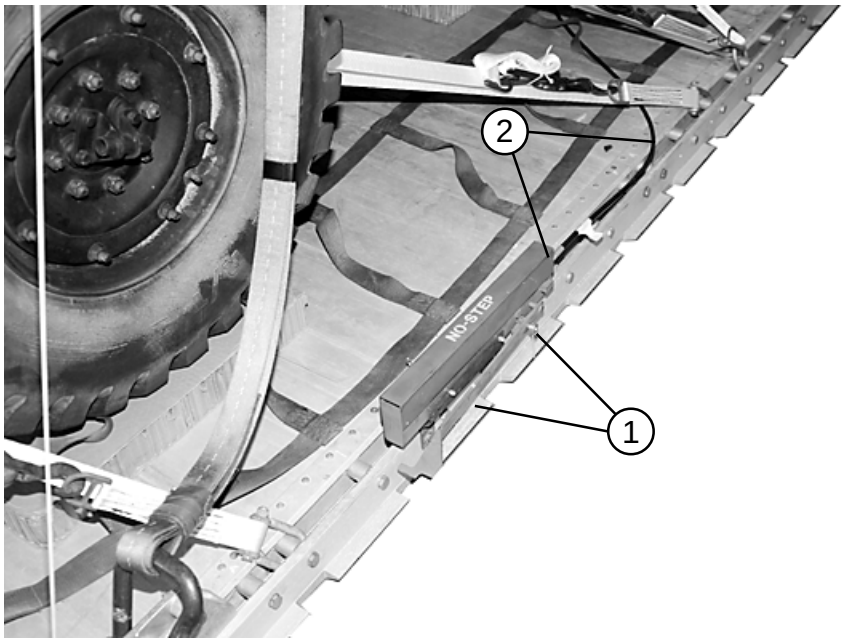

1 Install the EFTC mounting brackets in the rear mounting holes in the left platform side rail.

2 Attach a 20-foot release cable to the actuator. Install the actuator to the EFTC brackets.

Figure 3-18. EFTC Installed

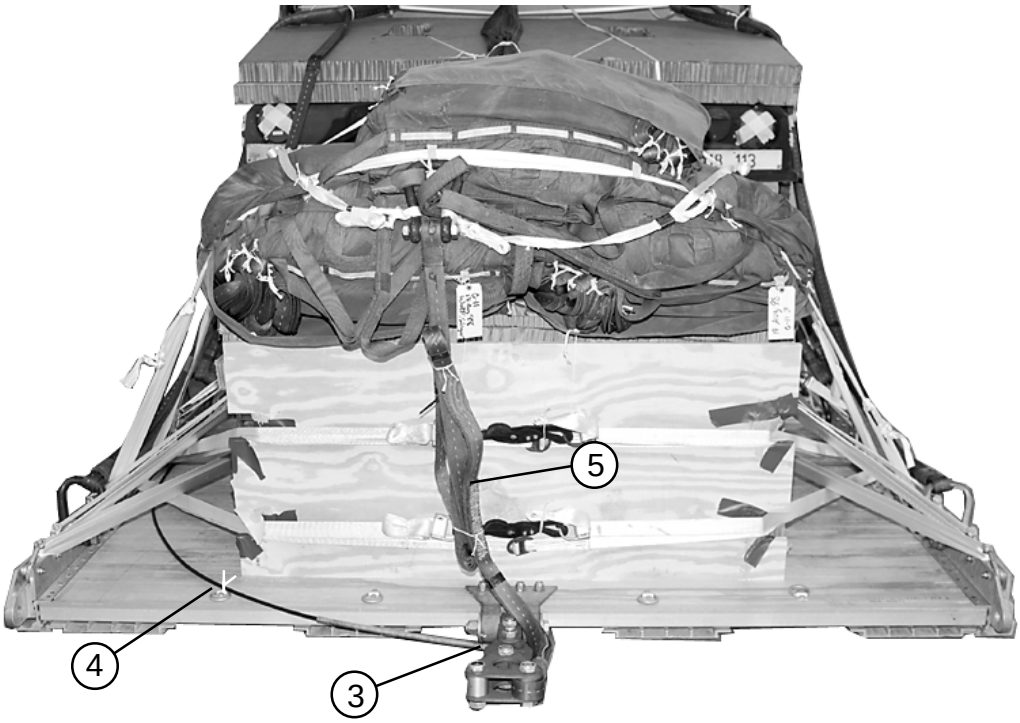

3 Install the latch assembly to the extraction bracket. Attach the release cable to the latch assembly.

4 Safety tie the release cable to bushings and tie-down rings with one turn of type I, 1/4-inch cotton webbing.

5 Install a 9-foot (2-loop), type XXVI nylon webbing deployment line on the load.

Figure 3-18. EFTC Installed (continued)

INSTALLING PROVISIONS FOR EMERGENCY RESTRAINTS

3-28. Install the provisions for emergency restraints on the load according to FM 4-20.102/TO 13C7-1-5.

PLACING EXTRACTION PARACHUTE

3-29. Select the extraction parachute and extraction line needed using the extraction line requirements table in FM 4-20.102/TO 13C7-1-5. Rig the extraction line in an extraction line bag according to TM 10-1670-286-20/TO 13C5-2-41. Place the extraction parachute and extraction line on the load for installation in the aircraft.

MARKING RIGGED LOAD

3-30. Mark the rigged load according to FM 4-20.102/TO 13C7-1-5, and as shown in Figure 3-19. Complete Shipper's Declaration for Dangerous Goods according to AFJMAN 24-204/TM 38-250. If the load varies from the one shown, the weight, height, CB, and parachute requirements must be recomputed.

EQUIPMENT REQUIRED

3-31. Use the equipment listed in Table 3-2 to rig this load. The equipment for rigging the accompanying load is NOT given in Table 3-2.

CAUTION
Make the final rigger inspection required by FM 4-20.102/ TO 13C7-1-5 before the load leaves the rigging site.

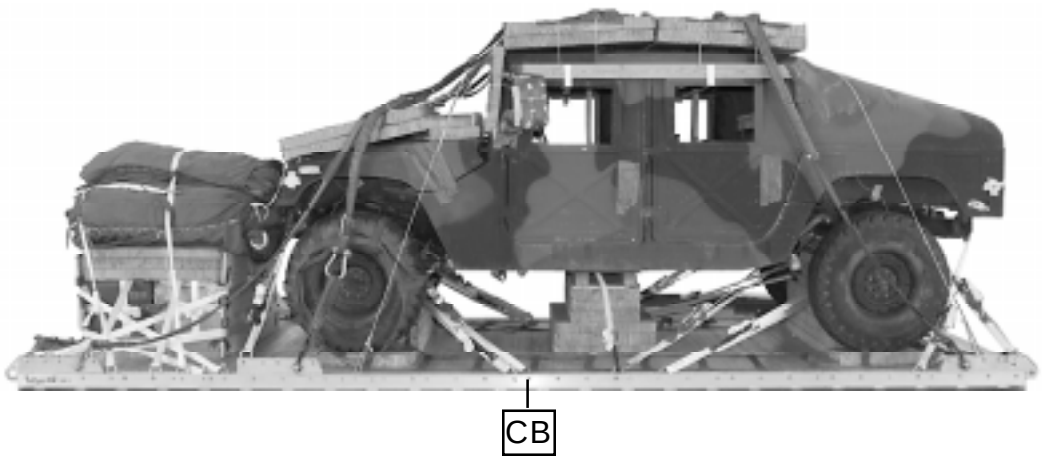

RIGGED LOAD DATA

Weight: Load shown ..... 11,740 pounds
Maximum load allowed ..... 12,100 pounds
Height ..... 91 inches
Width ..... 108 inches
Length (overall) ..... 265 inches
Overhang: Front ..... 0 inches
Rear (EFTC) ..... 18 inches
CB (from front edge of platform) ..... 112 inches

Figure 3-19. M1025 Armament Carrier Rigged on a 20-Foot Platform