USMC

MCWP 3-34.1

Military Police Operations

US Marine Corps

DISTRIBUTION STATEMENT A: Approved for public release; distribution is unlimited.

PCN 143 000081 00

USMC

To Our Readers

Changes: Readers of this publication are encouraged to submit suggestions and changes through the Universal Need Statement (UNS) process. The UNS submission processs is delineated in Marine Corps Order 3900.15_, *Marine Corps Expeditionary Force Development System*, which can be obtained from the Marine Corps Publications Electronic Library Online (http://www.marines.mil/news/publications/Pages/Publications137.aspx).

The UNS recommendation should include the following information:

- Location of change
  - Publication number and title
  - Current page number
  - Paragraph number (if applicable)
  - Line number
  - Figure or table number (if applicable)
- Nature of change
  - Addition/deletion of text
  - Proposed new text

Additional copies: A printed copy of this publication may be obtained from Marine Corps Logistics Base, Albany, GA 31704-5001, by following the instructions in MCBul 5600, *Marine Corps Doctrinal Publications Status*. An electronic copy may be obtained from the MCCDC Doctrine World Wide Web home page: **https://www.doctrine.usmc.mil**.

Unless otherwise stated, whenever the masculine gender is used, both men and women are included.

DEPARTMENT OF THE NAVY
Headquarters United States Marine Corps
Washington, D.C. 20380-1775

9 September 2010

FOREWORD

Marine Corps Warfighting Publication (MCWP) 3-34.1, *Military Police Operations*, provides the doctrinal basis for employment of military police (MP) in support of Marine air-ground task force (MAGTF) operations. This publication addresses MP tasks, functions, objectives, and capabilities occurring in peace, crisis, and war. It also describes how military police serve as a MAGTF force-multiplier by interacting and supporting tactical-level expeditionary activities.

This publication is designed for commanders and staff planners who are responsible for the conduct of activities in support of expeditionary operations and operations other than war. It provides information to facilitate planning and execution of MP operations regarding support of mission assurance, limited detainee operations, law and order operations, MP planning and training, and corrections. It also identifies logistic requirements, physical security, customs, and military working dog employment.

This revision supersedes MCWP 3-34.1 dated 13 October 2000.

Reviewed and approved this date.

BY DIRECTION OF THE COMMANDANT OF THE MARINE CORPS

GEORGE J. FLYNN
Lieutenant General, U.S. Marine Corps
Deputy Commandant for Combat Development and Integration

Publication Control Number: 143 000081 00

DISTRIBUTION A: Approved for public release; distribution is unlimited.

MILITARY POLICE OPERATIONS

TABLE OF CONTENTS

Chapter 1. Overview

MP Support to Mission Assurance 1-2
Law and Order Operations 1-2
Military Working Dog Operations 1-4
Limited Detainee Operations 1-4
Planning and Training 1-5
United States Customs and Border Support 1-5

Chapter 2. Military Police Personnel

MEF or MAGTF Provost Marshal or Provost Sergeant 2-2
MP Major Subordinate Command Staff Officer and/or SNCO 2-2
MEF MP Support Company Commander 2-2
Major Subordinate Command MP Company Commander 2-3
CID Chain of Command and Investigations Officer 2-3
Investigations Officer (MOS 5805) 2-3
Criminal Investigators (MOS 5821) 2-3
Corrections Officer (MOS 5804) 2-4
MEU or Special Purpose MAGTF Mission Assurance Officer
and MP Detachment 2-4
Corrections Officer or Specialist (MOS 5804 or 5831) 2-5
Detention Operations Officer 2-6
Detention Legal Advisor 2-6
Detention Facility and RDF Positions 2-7

Chapter 3. Mission Assurance

Force Protection 3-1
Antiterrorism 3-4
Critical Infrastructure Protection 3-4

Chapter 4. Law and Order Operations

Authority 4-1
Jurisdiction 4-3
Command and Control 4-4
Law and Order Functions 4-4
Host Nation Law and Order Operations Support 4-9

Chapter 5. Military Working Dog Operations

Mission 5-1
Organization 5-1
Capabilities 5-2
Types of Military Working Dogs 5-3
Supported Unit Questions for the MWD Handler 5-5
Planning Considerations 5-6
Transportation 5-7
Veterinary Support 5-8
Medical Concerns 5-8
Environment 5-8
Field Kennels 5-9

Chapter 6. Limited Detainee Operations

The *Geneva Conventions* 6-1
Personnel Categories 6-2
Detainee Operations 6-6
Civilian Internee Operations 6-7
Detainee Processing 6-7
Detainee Reporting System 6-13
Internment Serial Numbers 6-14
Detainee Identification Band and Identification Badge 6-15

Chapter 7. Planning and Training

Planning 7-1
Interagency Coordination 7-2
Training of In-Lieu-of-Forces 7-2
Military Police and Law Enforcement Training 7-3
Training for Units Deploying to Conduct Detention Operations 7-5
Personnel Deploying to Conduct Detention Operations 7-6

Appendices

A Customs and Border Clearance Program A-1
B Sample Military Police Support Estimate B-1
C Physical Security and Crime Prevention Checklists C-1

Glossary

References and Related Publications

CHAPTER 1
OVERVIEW

Military police (MP) support Marine air-ground task force (MAGTF) operations during peace, conflict, and war. As described in the *National Defense Strategy* (June 2008) and *The Long War: Send in the Marines*, there is an unparalleled need for police skills worldwide as terrorists, insurgents, and criminal technology advancements increase. Military police identify and help reduce these threats at all levels of conflict across the range of military operations (see fig. 1-1) and provide support within assigned areas through performance of their mission and support capabilities.

The Marine Corps' military police have the capability to function across the range of military operations. Not all police forces of the other Services and other nations can replicate this functional capability and utility. Since there is an abundance of multinational, interagency, and joint security services, the early involvement of MP leaders and staffs in the operations planning process is essential. Early involvement ensures the proper development of security responsibilities, communications, connectivity, liaisons, processes, and rules of interaction among all forces. The ultimate goal is the phased employment of MP forces to support the commander's operation plan. Military police assets are limited; therefore, they are not able to perform all functions simultaneously. Specific functions are performed at specified times as determined by the supported commander's priorities, the intensity of the conflict, the phase of the operation, and the availability of MP resources. The MAGTF commander, upon advice from the senior MP commander or provost marshal (PM), establishes priorities and courses of action (COAs) for MP support.

Military police possess specialized training and skills (i.e., law enforcement, accident and criminal investigations, use of force and continuum of force expertise, military working dog [MWD] employment, customs support) that differentiate them from other forces, increase their utility to the commander, and typically possess organic transport at the lowest level of employment to perform their mission. Mobility, weapons systems, and training enable military police to react quickly to changing situations and changes in priorities or conditions during operations, resulting in problem resolution and potential return to normality for the populace.

To meet Marine Corps and joint responsibilities, military police provide support within assigned areas through performance of their mission and support capabilities in support of the operational commander. The areas of support include mission assurance, law and order operations (LOO), MWD operations, limited detainee operations (LDO), planning and training, and US customs and border

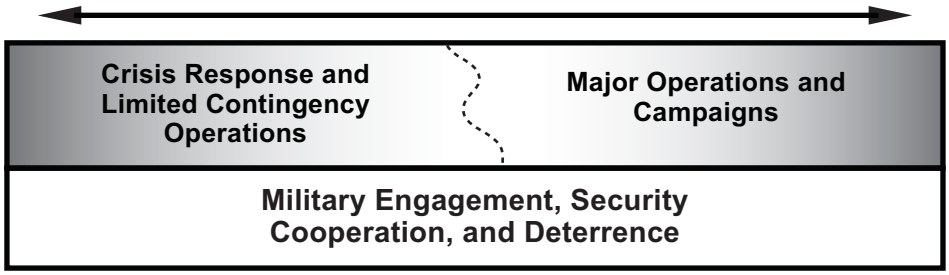

Figure 1-1. Range of Military Operations.

operations. Military police also perform specialized functions within these areas, including accident investigations, criminal investigations (e.g., tactical site exploitation, evidence collection and processing, interrogations, protective services operations [PSO]), physical security, forensics, and biometrics. In addition, military police enhance interoperability through liaison and coordination with interagency law enforcement organizations, joint, multinational, host nation (HN), and nongovernmental organizations.

MP Support to Mission Assurance

Military police capabilities contribute to the support of mission assurance. The ever-changing enemy and environmental situation requires military police to advise the commander of the probable impact a COA has with respect to mission assurance. Military police conduct vulnerability assessments to identify command areas that are vulnerable to terrorist attack. These assessments and the criminal and tactical information gathered by military police, criminal investigation division (CID), and the Naval Criminal Investigative Service (NCIS) assist in the development of unit plans that are dedicated to safeguarding property and personnel. Military police also provide PSO for key government leaders, flag officers, and civilian dignitaries. They also function as a training cadre that assists in providing the required antiterrorism training.

Law and Order Operations

Military police LOO are conducted to maintain and extend the commander's discipline and control by providing a lawful and orderly environment in which to operate. During LOO, military police establish liaison with HN police and conduct joint patrols with HN or multinational forces to maintain order and conduct security operations, thereby enhancing interoperability. The level and type of operation determines the requirement for additional MP support. The level and type of operation determines the requirements for LOO support. Law and order operations include measures that are necessary to conduct—

- Law enforcement operations.
- Criminal investigations, site exploitation, evidence collection, interrogations, and protective services.
- US customs support operations.
- Joint, interagency, multinational, and HN police operations and training.
- Police intelligence operations.

Law Enforcement Operations

An evolving criminal threat may have an adverse effect on military operations and require commanders to take actions that will reduce the negative impact on forces, resources, and operations. As part of this effort, military police—

- Enforce laws and appropriate directives of the commander.
- Provide crime prevention and physical security.
- Conduct traffic accident investigations and law enforcement patrolling.

Military police also enforce the MAGTF commander's main supply route (MSR) regulations and traffic circulation plans to keep MSRs free for priority military movement. Military police maintain liaison and coordinate with other Department of Defense (DOD) police organizations, HN military and civilian authorities, and multinational police organizations. A coordinated law enforcement effort removes the conditions and opportunities that promote crime, thereby maintaining military discipline and preventing diversion of military resources.

Criminal Investigations, Site Exploitation, Evidence Collection, Interrogations, and Protective Services

Marine expeditionary force (MEF) MP support companies provide CID support to the MEF and MAGTF. Offenses committed against US forces and properties degrade military discipline, morale, and operational capabilities. These crimes and offenses must be investigated to support the commander's responsibility to protect personnel, supplies, facilities, readiness, and operational capabilities. Military police and/or CID will conduct criminal investigations, site exploitations, evidence collection, interrogations, and protective services. Depending upon the type and seriousness of the offense under investigation, military police investigators (MPIs)-, CID-, or NCIS-led investigations may be conducted in coordination with other DOD and HN investigative agencies.

Joint, Interagency, Multinational, and Host Nation Police Operations/Training

Military police LOO may involve operations, training, and liaison with joint, interagency, multinational, and HN military or civilian police, or a combination thereof. The status-of-forces agreement (SOFA), standing rules of engagement (SROE), standing rules for the use of force (SRUF), and other guidance serve as the basis for MP law and order activities. As part of these operations, military police may, in situations where the local national authority has deteriorated or been eliminated, conduct law enforcement operations and investigations; provide initial assistance and training to HN military and civilian police forces; or assist in the creation, training, and operation of these forces.

United States Customs Support Operations

Customs support is a requirement when US personnel return to a customs territory of the United States (CTUS). Military police provide customs support and border control to ensure units and individuals comply with United States Customs and Border Protection (CBP), other Governmental agencies, and United States Department of Agriculture (USDA) requirements. In the absence of CBP personnel, customs-certified military police, often aided by MWD teams, conduct military customs inspections to enforce US customs laws and regulations. While conducting customs support operations, military police may be required to establish and operate or assist HN authorities with border security operations. Appendix A addresses customs support operations in more detail.

Police Intelligence Operations

Police intelligence operations (PIO) support, enhance, and contribute to the commander's protection program, situational awareness, and battlefield visualization by portraying relevant threat information that may affect the operational and tactical environments. This threat information is gathered while conducting MP tasks. Police intelligence operations include the following:

- Demonstrating MP and CID capability to collect relevant threat information actively or passively.
- Ensuring that all information collected while conducting MP tasks continues to be reported through the proper MP channels so that it can be analyzed by the appropriate battalion, regiment, or higher level staffs.
- Maintaining constant liaison and communication with the following:
  - Higher headquarters.
  - Psychological operations units, as appropriate.
  - HN police and other law enforcement agencies.
  - Joint, interagency, and multinational forces.
  - Staff judge advocate (SJA).
  - Civil-military operations center.
  - Civil affairs teams.
  - Mission assurance officer.

Military Working Dog Operations

The MWD program effectively integrates expertly trained MWD handlers and highly intelligent breeds of dogs into MWD teams. These teams are employed in dynamic ways that continue to evolve and be a highly trained asset that commanders continue to use around the world. These specialized teams aid commanders in conducting stability and warfighting operations. Being modular and mobile makes these teams very agile, enabling them to deploy rapidly and integrate quickly into operations. In order to perform joint operations, multiechelon tasks, and interagency missions, these teams maintain a high tempo of operations. As technology and world security situations evolve, the MWD team will continue its transformation to provide commanders the unique capabilities required to be combat force multipliers on the battlefield and support mission assurance efforts.

Limited Detainee Operations

As an integral part of the full range of military operations, there is the requirement to prepare for and conduct intensive detainee operations. Combat and stability operations in the war on terrorism and the long war continue to result in the detention of known or suspected criminals, combatants, and civilians as military forces seek to support emerging democracies, eliminate terrorists, and quell insurgencies. Modern military actions, whether in a contiguous or noncontiguous environment characteristic of the war on terrorism, result in the capture of many and varied detainees. The detainees of the war on terrorism differ significantly from the traditional enemy prisoners of war (EPWs) of past conflicts and present a much greater security threat during processing, escorting, and handling.

Personnel conducting detainee operations must ensure that these operations are performed in a manner that reduces the possibility of incidents of abuse involving US Armed Forces and detainees. All detainees will be provided the protections of the *Geneva Convention Relative to the Treatment of Prisoners of War* until some other status is determined by competent authority. Professional performance by military police of the detainee operations mission is critical for sustaining goodwill between the HN and international population.

The Secretary of the Army is designated as the executive agent for the administration of the DOD EPW Detainee Program per Department of Defense directive (DODD) 2310.01E, *The Department of Defense Detainee Program.*

Military police support the MAGTF and assume the responsibility for detainee operations. Detainee operations apply to any person captured, detained, held, or otherwise under the control of DOD personnel (e.g., military, civilian, contractor employee). Detainee operations do not apply to persons being held primarily for law enforcement purposes, except where the United States is an occupying power across the range of military operations. Detainees may fall into the following categories as defined in DODD 2310.01E:

- Enemy combatants (ECs), including both lawful and unlawful.
- EPWs.
- Retained persons (RPs).
- Civilian internees (CIs).

The handling of detainees is an administrative, tactical, and operational consideration that must be addressed during planning to prevent forces from being hindered by large numbers of EPWs and CIs.

> *Note: During Operation Desert Storm, multinational forces detained 86,743 EPWs and CIs and only 1,492 were categorized as innocent civilians. During Operation Iraqi Freedom, multinational forces detained over 25,000 EPWs and CIs.*

When faced with large detainee control responsibilities, the conduct of detainee operations by military police enhances MAGTF effectiveness.

Military police assumption of these efforts mitigates the diversion and tasking of other MAGTF resources to conduct detainee operations, which aids in maintaining combat strength. Although military police provide the MAGTF commander with these unique capabilities, detainee operations are manpower-intensive. To maximize the capabilities of limited MP assets, the MAGTF commander must prioritize MP missions and tasking. Even though military police support the MAGTF by undertaking detainee operations, commanders and staffs should understand the following:

- The law of war.
- The US policy governing provisions for handling detainees.
- The objectives, principles, and the MP role in detainee operations.

The MEF MP support companies provide corrections and detainee expertise. The MEF major subordinate command (MSC) MP companies may conduct LDO, but are not resourced to conduct intensive detainee operations. Military police detachments assigned to Marine expeditionary units (MEUs) are not equipped to conduct detention operations without severely degrading all other capabilities and support to the MAGTF. Marine expeditionary units require significant augmentation and mitigation in order to conduct detention operations.

Planning and Training

Military police provide subject matter expertise and training for in-lieu-of MP forces and MP and law enforcement (e.g., detective, criminal investigations) training for infantry and other Marines, providing them with additional skills needed to carry out assigned missions and tasks. Each MSC has a staff noncommissioned and commissioned officer assigned to provide MP planning, training, coordination, and oversight. Military police provide specialized and general support planning and training as required by supported units. Specialized support is primarily located in the MEF with the MP support company under the MEF headquarters group. If additional planning, training, or MP support is required beyond the organic capability of MSC military police, the MSCs should request support from the MEF.

United States Customs and Border Support

Military police provide the commander a high degree of flexibility through the execution of customs operations. Personnel, equipment, and material entering the CTUS must meet customs, postal, immigration, agriculture, and other Federal agency requirements. During the redeployment of forces, customs-trained military police, working with joint and US Federal agencies, help to ensure compliance with regulations and applicable provisions of international agreements by detecting and investigating violations.

CHAPTER 2
MILITARY POLICE PERSONNEL

The mission, enemy or potentially hostile elements, and operational environment influence the composition and employment of MP assets. The MP commander task-organizes personnel and equipment for the assigned mission.

The MAGTF commander may task-organize MP units as required. Consolidation of MP personnel and resources creates a more robust MP unit capable of executing a wider range of operational tasks while allowing greater support flexibility throughout the MAGTF area of operations (AO). To maintain capabilities, an MP platoon (1 officer and 40 enlisted) is normally the lowest level of unit employed.

A variety of command and control options may be employed to use limited MP assets efficiently based upon an analysis of the mission. Those options include:

- Decentralized control and decentralized execution.
- Centralized control and decentralized execution.
- Centralized control and centralized execution.

The traditional option of decentralized control and decentralized execution retains MP units in each MSC. Military police remain assigned to the respective MSC MP commander and are organic to the MSC, which provides administrative and logistical support. While this method is the most responsive to the individual MSC commander's needs and is useful when the MAGTF elements have wide geographic separation, it may be difficult to rapidly coordinate MP capabilities.

Centralized control and decentralized execution combines MAGTF MP assets to form an MP unit under a single commander. This MP unit provides either general support throughout the MAGTF AO or direct support to subordinate elements as required. The MAGTF commander retains the ability to shift MP assets as the situation dictates. This method of employment may be best suited in a combat environment where subordinate elements are collocated or share common boundaries. In addition, this method provides for a timely response to a supported element's needs, yet allows the senior MP commander to analyze and direct MP activities, while the MAGTF command element provides administrative and logistical support.

During centralized control and centralized execution, MAGTF MP assets are placed in a MP unit under a single commander (e.g., the MEF PM or the senior MP company commander may be designated as the MEF MP commander) and this MP unit provides general support to the MAGTF. While this is the least traditional method of employment, it may be preferred when the MAGTF mission is peacekeeping or humanitarian assistance within a limited AO. The MAGTF command element also provides administrative and logistical support.

Each MAGTF commander may designate a MAGTF PM under the cognizance of the MAGTF operations assistant chief of staff/operations officer. Each MEF has a field grade MP officer assigned as the MAGTF PM and a senior staff noncommissioned officer (SNCO) assigned as the provost sergeant. The MEFs have an MP support company in the MEF headquarters group to provide MP specialized support. Each MEF MSC (e.g., Marine division, Marine aircraft wing, Marine logistics group) has an MP officer and SNCO serving on the staff to provide MP planning, coordination, and expertise and an organic MP company to provide operational support. Each MEU has an MP officer assigned as the mission assurance officer and a detachment assigned to the MEU command element.

MEF or MAGTF Provost Marshal or Provost Sergeant

The PM provides the MAGTF commander with MP employment subject matter expertise and coordinates MP activities to ensure the proper allocation of limited resources. The PM is responsible for ensuring that military police are tasked according to the concept of operations and the priorities established by the MAGTF commander.

This position is normally held by a senior MP officer on the MEF staff. If the PM deploys or is not staffed, the provost sergeant will perform these duties. If both are present, the PM is responsible and the provost sergeant supports him. The following are PM duties and responsibilities:

- Advises the MEF or MAGTF commander on matters pertaining to MP operations.
- Supervises and coordinates MP assets and operations within the MAGTF.
- Supervises joint prosecution and exploitation center (JPEC).
- Coordinates law enforcement matters between MSCs.
- Provides MP planning for the MEF.
- Coordinates MP training for the MEF.
- Coordinates MEF and MAGTF law enforcement matters with other Services and or HNs.
- Coordinates and oversees matters pertaining to detainees.
- Advises the commander on mission assurance.
- Oversees the use of biometrics in the MEF.
- Coordinates and oversees the law enforcement advisor program in the MEF.

MP Major Subordinate Command Staff Officer and/or SNCO

The following are duties and responsibilities of this position:

- Advises the MSC or MAGTF commander on matters pertaining to MP operations.
- Supervises and coordinates MP assets and operations within the command.
- Coordinates law enforcement matters between subordinate commands.
- Provides MP planning for the MSC.
- Coordinates MP training within the MSC.
- Coordinates MSC law enforcement matters with the MEF, other Services, and HNs, as appropriate.
- Coordinates and oversees matters pertaining to detainees.
- Advises the commander on mission assurance.
- Coordinates and oversees biometrics program in MSC.
- Coordinates and operates the law enforcement advisor program in the MSC.

MEF MP Support Company Commander

The following are duties and responsibilities of this position:

- Coordinates MP support through the MEF PM.
- Provides MP general support to include training and planning.
- Provides MP specialized support in the following areas:
  - Mission assurance support (e.g. physical security, nonlethal weapons [NLWs]).
  - Criminal investigation support (e.g., tactical site exploitation, PIO, evidence collection and processing, interrogations, PSO, biometric support).
  - Traffic accident investigation support.
  - MWD support (e.g., drug and explosive detection, patrolling, tracking, specialized search).
  - Corrections expertise and advisory support in planning, conducting, and supporting detainee operations.
  - Supervision of MP specialized planning and training.

Major Subordinate Command MP Company Commander

The following are duties and responsibilities of this position:

- Coordinates MP support through the MCS MP staff officer.
- Conducts MP operations (i.e., mission assurance, LOO, LDO, planning, and training) in support of the MSC or as directed per this publication.
- Provides centralized and decentralized support as required.
- Provides MP training.

CID Chain of Command and Investigations Officer

During deployments, CID investigators are operationally controlled by the MEF PM or senior MP officer assigned to a command where CID Marines are assigned. Any issues concerning investigations (e.g., taskings, requests for investigations) are the responsibility of the investigations officer and PM or senior MP officer within the command.

Investigations Officer (MOS 5805)

The following are duties and responsibilities of the investigations officer:

- Serves as the subject matter expert for all matters pertaining to criminal investigations, protective service details, evidence collection, processing, storage and disposition, criminal intelligence, and criminal interrogations.
- Serves as MEF or MAGTF liaison concerning MEF or MAGTF criminal investigations and CID capabilities.
- Supervises all criminal investigators (i.e., military occupational specialty [MOS] 5821) assigned throughout the MEF or MAGTF.
- Ensures the Consolidated Law Enforcement Operations Center/Department of the Navy Criminal Justice Information System criminal reporting systems are incorporated into the documentation of the investigations.
- Tracks MEF or MAGTF criminal investigations and CID operations.
- Oversees the daily operation and administration of the CID as follows:
- Case management (e.g., requests for assistance, forensic examination requests, command notifications, SJA briefs).
- Staffing issues.
- Training (e.g., Consolidated Law Enforcement Operations Center/Department of the Navy Criminal Justice Information System, predeployment criminal investigator training, in-service criminal investigator training, documentation procedures, HN judicial process).
- Oversees the placement and delivery of orders for investigative equipment.
- Maintains, revises, and updates fragmentary orders (FRAGOs), standing operating procedures (SOPs), and other pertinent directives.
- Conducts liaison with HN and other military and civilian law enforcement agencies.
- Provides status reports on investigations of interest to MEF PM, SJA, or commanders.
- Maintains standards for training of CID staff personnel.
- Makes the necessary notifications and/or referrals to agencies deemed appropriate.
- Coordinates and provides advice in the use of biometrics in the MEF.
- Coordinates and operates the law enforcement advisor program.

Criminal Investigators (MOS 5821)

Criminal investigators are assigned to the MEF MP support company and provide support to the MEF unit. Duties of criminal investigators are

based upon the type of mission assigned and may include the following:

- Conducts criminal investigations.
- Conducts protective security operations.
- Plans and conducts law enforcement and investigations training, including site exploitation, evidence collection and exploitation, and tactical questioning (TQ).
- Collects, processes, stores, and disposes of evidence.
- Advises commanders and their staffs on law enforcement and criminal investigations.
- Serves as and conducts the duties of a law enforcement advisor when assigned.
- Conducts criminal intelligence operations.
- Makes the appropriate notifications.
- Employs and advises units on the use of forensics and biometrics.
- Supports JPEC operations.
- Conducts liaison with US, HN, multinational, and other military and civilian law enforcement organizations as required.
- Employs and advises units on the use of investigative equipment.

Corrections Officer (MOS 5804)

The following are duties and responsibilities of the corrections officer:

- Serves as the subject matter expert for all matters pertaining to detainee handling procedures.
- Serves as MEF or MAGTF liaison concerning MEF, MAGTF detention facilities, and the administration and operation of regional detention facilities (RDFs).
- Supervises all corrections specialists (i.e., MOS 5831) assigned throughout the MEF and/or MAGTF.
- Ensures biometric automated toolsets and/or other biometric tools are incorporated into the detainee processing procedures at each detention facility or RDF.
- Tracks MEF and/or MAGTF detainees from detention facility or RDF through internment at theater internment facilities (TIFs).
- Provides accountability for detainees evacuated from detention facilities or RDFs to theater medical treatment facilities.
- Oversees daily operation and administration of detention facilities or RDFs in the following areas:
  - Supplies (e.g., detainee uniforms, identification bracelets, warning signs, mattresses, blankets, forms, biometric automated toolsets).
  - Staffing issues.
  - Training (e.g., biometric automated toolsets, predeployment, in-service corrections training).
- Prepares and submits MEF or MAGTF daily detention report.
- Requests the appropriate force protection equipment.
- Provides regular assessments of detention facilities and RDFs and ensures operational readiness of each facility.
- Maintains, revises, and updates FRAGOs, SOPs, and other pertinent directives.
- Updates MEF and MAGTF detentions web page.
- Provides detention operations input for MEF or MAGTF command chronology.
- Maintains standards for training of detention facility or RDF staff personnel.

MEU or Special Purpose MAGTF Mission Assurance Officer and MP Detachment

Mission Assurance Officer

Each special purpose MAGTF (SPMAGTF) or MEU is assigned an MP officer who is specially trained to perform duties as the MAGTF mission assurance officer. This MP officer is responsible

to the commander. Tasks performed by the MEU or SPMAGTF mission assurance officer include the following:

- Develops unit plans to protect personnel and equipment and to preserve combat power.
- Advises the commander on mission assurance issues.
- Conducts vulnerability assessments of ports, points of embarkation or debarkation, and other forward areas while deployed and/or during predeployment site surveys.
- Liaises with HN authorities, NCIS, and the Department of State for force protection measures abroad and to coordinate law enforcement matters while deployed.
- Conducts MP training throughout the MAGTF (e.g., NLWs, detainee operations, evidence collection and handling, customs operations, level I antiterrorism awareness).
- Advises the commander on law enforcement and mission assurance matters during COA development and mission execution and develops MP support estimates (see app. B) of the situation for MAGTF operations.
- Enhances unit preparedness through the identification, procurement, employment, and maintenance of force protection systems and equipment.
- Supervises and coordinates MP assets and operations within the MEU or SPMAGTF.
- Trains and/or supports HN, joint, and combined law enforcement activities.
- Gathers and disseminates information within the MAGTF and submits police information and intelligence to the MAGTF G-2 or S-2.

MP Detachment

When assigned, MP detachments provide specialized support to the MEU or SPMAGTF. The MP detachment is operationally controlled by the MEU or SPMAGTF command element through the MEU or SPMAGTF mission assurance officer. The MP detachment or cadre provides the MAGTF commander with mission assurance support capabilities, and the mission assurance officer suggests methods to detect and defeat the terrorist threat and plans and coordinates the MP operations. The MEU and SPMAGTF subordinate elements may also have organic MP detachments. The MEU or SPMAGTF MP detachment is task-organized to provide the MAGTF commander capabilities in—

- MP support.
- NLW training and employment, per Marine Corps Warfighting Publication (MCWP) 3-15.8, *MTTP for the Tactical Employment of Nonlethal Weapons (NLW)*.
- Mission assurance planning and assessments.
- Criminal investigations.
- Accident investigations.
- Physical security.

Corrections Officer or Specialist (MOS 5804 or 5831)

Mission support requirements determine the number of corrections specialists in a corrections detachment. The MAGTF and MEF MSC commanders may request that the corrections specialists support deployments and operations with a detention requirement. Typically, a minimum of two SNCO corrections specialists are assigned to each detention facility or RDF and are designated as the staff noncommissioned officer in charge (SNCOIC) and the operations or training chief.

The corrections officer's or specialist's capabilities enhance the commander's ability to protect forces and assets. Each MEF has a cadre of corrections specialists assigned in the MP support company and controlled by the MEF PM. Corrections specialists enhance the effectiveness of law enforcement and other operations by providing

subject matter experts to assist in the area of detention operations. In-garrison corrections specialists are employed at Levels I, II, and III DOD correctional facilities and pretrial confinement facilities. Corrections specialists deploy in support of any unit conducting detention or internment operations. During conflict, deployments, and field environments, assigned corrections detachments provide subject matter experts to assist in the following areas:

- Predeployment detention operations training.
- Development of the detention facility or RDF SOP.
- Development of the detention facility or RDF plan of the day (POD).
- Development of the detention facility or RDF detainee rules and regulations.
- Development of the detention facility or RDF in-service training plan.
- Daily supervision and operation of each detention facility or RDF.
- Development of a corrections training team.

Detention Operations Officer

This position is held by an officer (i.e., MOS 5803) or corrections chief warrant officer (i.e., MOS 5804). Responsibilities of this position are as follows:

- Serves on the MEF or MAGTF staff and reports to the PM.
- Assumes responsibility for overall operation of all detention facilities and RDFs.
- Coordinates detainee transfers from detention facilities and RDFs to the TIF.
- Advises the MEF or MAGTF commander and staff on operational planning, status of detention facilities, and detainee processing.
- Prepares the weekly brief concerning the number of detainees in detention, special status, upcoming releases, and other items of interest.
- Responds to high visibility requests for information concerning detainees in MAGTF custody.
- Responds to detainee related queries from MAGTF staff.
- Serves as MEF or MAGTF detentions liaison.
- Provides assessments and site visits to all detention facilities and RDFs to ensure operational readiness and compliance with MEF and MAGTF SOPs.
- Maintains, updates, and revises MEF or MAGTF detentions Web site.
- Maintains standards for detainee handling and administration of detention facilities and RDFs for MEF or MAGTF personnel and MSCs.
- Ensures all MEF or MAGTF personnel assigned to detention duties are trained in accordance with applicable standards.
- Ensures biometric automated tool sets and/or other biometric tools are incorporated into the detainee processing procedures at each detention facility and RDF.

Detention Legal Advisor

Depending on the situation, either a judge advocate assigned as a detention legal advisor, or the cognizant command's SJA, will be responsible to ensure that the detention facility commander receives legal advice on international law and domestic laws, rules, and regulations in all aspects of the detention facility’s operation. These operations include intake processing, holding, review, and release. Additional responsibilities of the detention legal advisor include the following:

- Reviewing and overseeing detainee packages, if applicable.
- Reviewing and providing advice on the detention facility’s internal SOPs and regulations.
- Reporting all allegations of detainee abuse.
- Reviewing and overseeing all investigations of detainee abuse.
- Inspecting and overseeing detainee interrogations.
- Inspecting the detention facilities on a regular basis.

- Serving as the primary liaison for external visitors (e.g., International Committee of the Red Cross [ICRC], other government agency).
- Serving as the primary liaison to MSCs and properly constituted release and review boards on detainee-related issues.
- Maintaining the traditional legal functions, which includes advising the facility commander of legal issues affecting the operation of the facility.

Detention Facility and RDF Positions

Detention Facility and RDF Officer in Charge

This position is held by at least a noncommissioned officer and is, preferably, not a rotating position. The officer in charge (OIC) may also appoint a primary and alternate custodian to ensure a custodian is available at all times. Responsibilities of this position are as follows:

- Ensures detainees are treated firmly, fairly, and consistently with dignity and respect.
- Oversees the daily operations, staffing, safety, security, and well-being of all personnel (e.g., guards, detainees) housed or working within the detention facility or RDF.
- Conducts a daily head count of each detainee, noting and taking action on any problems.
- Documents the daily head count in the detention facility or RDF master log.
- Signs every Department of Defense (DD) Form 2708, *Receipt for Inmate or Detained Person*, associated with persons held in the detention facility or RDF or delegates signature authority to SNCOIC.
- Ensures all detention facility or RDF guard force members have read and understand the commanding general's intent for detention operations.
- Ensures all detention facility or RDF guard force members have read and understand the rules for guards.
- Ensures all detention facility or RDF guard force members have received all available preservice detention operations training, to include rules for use of force classes, prior to standing guard watch.
- Ensures preservice training documentation is well-maintained.
- Reports any mistreatment of detainees immediately to the next detention operations officer or his designee.
- Ensures proper handling, documentation, and storage of all evidence and property within the detention facility or RDF.
- Appoints property and evidence custodians, in writing, to collect and preserve detainee property and evidence.
- Limits access to property and evidence to custodians, OIC, and SNCOIC.
- Ensures detainee confinement procedures are in accordance with applicable orders, directives, and SOPs.
- Ensures only official visitors are allowed access to detainees.
- Establishes and publishes the detention facility or RDF POD.
- Ensures a credentialed medical authority examines each detainee at least every 24 hours. The daily sick call fulfills this requirement.
- Ensures that each detainee's personnel file is reviewed by the detention facility or RDF's detention review authority within 72 hours of confinement.
- Conducts random and unannounced inspections of the facility to verify detainees are being treated firmly, fairly, and consistently with dignity and respect in accordance with the detention facility or RDF SOP.
- Maintains a facility SOP and posts orders and emergency plans.
- Ensures biometric automated tool sets and other biometric tools are incorporated into detainee processing.

Detention Facility or RDF SNOIC

The SNOIC position is usually held by MOS 5831. Responsibilities of this position are as follows:

- Ensures detainees are treated firmly, fairly, and consistently with dignity and respect.
- Assists the detention facility or RDF OIC and assumes the responsibilities of the OIC during times of absence.
- Conducts a daily head count of each detainee, noting and taking action on any problems.
- Documents the daily head count in the detention facility or RDF master log.
- Assesses and implements the most effective NLWs.
- Trains and supervises the use of biometric automated tool sets and other biometric tools employed in detainee processing.

Detention Facility or RDF Operations and Training Chief

This position is usually held by MOS 5831. Responsibilities of this position are as follows:

- Ensures detainees are treated firmly, fairly, and consistently with dignity and respect.
- Assists the detention facility or RDF SNCOIC and assumes responsibilities of the SNCOIC during times of absence.
- Supervises the day-to-day detention operations, conduct of guard shifts, and noncommissioned officers in charge (NCOICs).
- Assists in daily head count of each detainee, noting and taking action on any problems.
- Documents daily head count in the detention facility or RDF master log.
- Trains and supervises the use of biometric automated tool sets and other biometric tools employed in detainee processing.

Detention Facility and RDF Shift NCOIC

This shift NCOIC is held by the senior noncommissioned officer of a guard watch. Responsibilities of this position are as follows:

- Ensures detainees are treated firmly, fairly, and consistently with dignity and respect.
- Executes the POD.
- Conducts guard mount.
- Supervises the guard section.
- Maintains all required detention facility or RDF logs and documentation.
- Supervises the use of biometric automated tool sets and other biometric tools in detainee processing.

Detention Facility and RDF Property and Evidence Custodian

This position is held by a SNCO. Responsibilities of this position are as follows:

- Ensures detainees are treated firmly, fairly, and consistently with dignity and respect.
- Inventories property and evidence and annotates the results on an Office of the Chief of Naval Operations (OPNAV) Form 5527/22, *Evidence/Property Custody Receipt*, or Department of the Army (DA) Form 4137, *Evidence/Property Custody Receipt*. Either form may be used based upon the situation in a given operational area and the chain of command.
- Ensures the delivering unit verifies the date and signs the "Released By" block on the OPNAV Form 5527/22 or DA Form 4137.
- Ensures the property and evidence custodian signs the "Received By" block on OPNAV Form 5527/22 or DA Form 4137.
- Seals all evidence in a large envelope or container.
- Marks across the seam of the sealed envelope or sealed container, annotating the signature of

the person sealing the evidence, date, time, and detention facility or RDF number of the detainee.

- Attaches a copy of OPNAV Form 5527/22 or DA Form 4137 to the envelope or container.
- Attaches a label to items too large for a container, with the signature of the person inventorying the evidence, annotating the date, time, and detention facility or RDF number of the detainee.
- Stores all evidence pertaining to a detainee in a secure evidence and property room that is accessible only to property and evidence custodians, OIC, and SNCOIC.
- Ensures that a copy of OPNAV Form 5527/22 or DA Form 4137 accompanies all property and evidence pertaining to a detainee.
- Inventories all property and evidence weekly and annotates all inventories in the property and evidence log.
- Verifies the integrity of sealed containers or documents.
- Records the specific number of bills of each denomination and nomenclature of the money seized, on OPNAV Form 5527/22 or DA Form 4137 rather than simply indicating "cash" (e.g., five 25,000 Iraqi Dinar notes, six $100 US dollar bills, serial numbers).
- Annotates the serial number for seized firearms on OPNAV Form 5527/22 or DA Form 4137. If there is no serial number, the firearm will be labeled identifying the date, location, and detainee detention facility of RDF number from whom the firearm was seized. A photograph of the firearm will also be included.
- Maintains the property and evidence log to be able to track the chronological movement of evidence to and from the property and evidence room.
- Records when the evidence custodian is not available or on duty, who the alternate custodian is, and when he assumed duty.
- Documents any access to the property, securing and inventorying the property and evidence room following access. Inventories evidence if it changes hands or the detainee is transferred. The evidence will be signed for by the person assuming custody by utilizing OPNAV Form 5527/22 or DA Form 4137.
- Ensures when a detainee is released that he will not receive a confiscated weapon without showing a valid weapons authorization card.
- Ensures that improvised explosive device (IED) materials will not be returned.

Detention Facility and RDF Guards

Guard positions are held by Marines with the rank of sergeant and below. Responsibilities of these positions are as follows:

- Ensures detainees are treated firmly, fairly, and consistently with dignity and respect.
- Reads and understands the commanding general's intent for detention operations and rules for guards prior to standing guard watch.
- Receives preservice detention operations training prior to working in the detention facility or RDF.
- Maintains custody, control, and discipline of detainees in the detention facility or RDF.
- Conducts periodic inspections, searches, head counts, and roll calls.
- Follows orders and instructions given by the detention facility or RDF OIC, SNCOIC, and shift NCOICs.
- Reports the mistreatment of detainees to the chain of command (i.e., OIC, SNCOIC, operations and training chief, or shift NCOICs) immediately.
- Utilizes biometric automated tool sets and other biometric tools in detainee processing.

CHAPTER 3
MISSION ASSURANCE

The mission assurance process ensures that assigned tasks or duties can be performed in accordance with the intended purpose or plan. This chapter is a summation of the activities and measures taken to ensure that required capabilities and all supporting infrastructures are available to the DOD to carry out the National Military Strategy. It links numerous risk management program activities and security-related functions, which include force protection; antiterrorism; critical infrastructure protection; information assurance; continuity of operations; chemical, biological, radiological, nuclear, and high-yield explosives defense; readiness; and installation preparedness.

The mission assurance process creates the synergistic effect required for the DOD to mobilize, deploy, support, and sustain military operations throughout the full range of military operations. As part of the mission assurance program, commanders establish a plan that incorporates the programs, activities, and functions defined by DODD 3020.40, *Defense Critical Infrastructure Program (DCIP)*, and the military police provide the commander with the capabilities that contribute to the unit's ability to develop a plan and be able to accomplish the mission set forth in the plan.

Although the above is a complete list of mission assurance functions, the military police only provide support to force protection, antiterrorism, and critical infrastructure protection.

Force Protection

Military police provide support to force protection within the areas of assessments, PSO, NLWs, MWD operations, biometrics, and LOO.

Marine Corps Doctrine Publication 1-2, *Campaigning*, states that force protection safeguards our own centers of gravity and protects, conceals, reduces, or eliminates critical vulnerabilities. In stability operations, force protection may include protecting the supported nation's population, infrastructure, and economic or governmental institutions. An inherent command responsibility—force protection—also encompasses precautions taken against terrorist activities that target US forces or noncombatants. Leaders are responsible for ensuring that Marines are properly prepared to meet, counter, and survive threats that may be confronted throughout the battlespace; thus, conserving combat power for application at a decisive time and place.

Force protection is designed to protect military personnel, civilian employees, family members, facilities, and equipment. This protection is accomplished through a systematic approach that integrates the planning and application of antiterrorism and combating terrorism measures, physical security, operations security, LOO, and personal protective measures, which are supported by intelligence, counterintelligence, and other security programs. The Navy/Marine Corps Departmental Publication (NAVMC) 2927, *Antiterrorism/Force Protection Campaign Plan*, clarifies the issue of antiterrorism as it relates to force protection and also provides commanders with a source document upon which to institutionalize local programs.

Note: For operating forces, force protection will normally be addressed in the operation order or operation plan's Appendix 15 (Force Protection) of Annex C (Operations).

Assessments

Assessments are essential to the development of an effective mission assurance program. Threat assessments form the basis for planning, justification of resource expenditures, and contribute to the planning and establishment of specific force protection condition measures. The Navy Antiterrorism Analysis Center prepares area threat assessments to provide the commander with an updated analysis of the threat in a particular AO. The local threat assessment may also be obtained via the resident NCIS office.

Vulnerability assessments provide the commander a threat-based analysis and self-assessment tool to evaluate the unit's vulnerability to terrorist attack. In a tactical environment, vulnerability assessments enhance the unit security posture by improving stationary asset security. The more vulnerable a unit, the more attractive it becomes to terrorists.

Vulnerabilities identified during assessments provide justification for establishing specific force protection condition measures and actions. Prior to deployment, vulnerability assessments must be conducted to identify the appropriate force protection measures and to reduce risk. Military police assigned to the MAGTF should be integrated into the vulnerability assessment team and predeployment site survey team.

Military police reduce vulnerabilities to terrorist attack by—

- Focusing on those elements directly related to combating terrorism, including preventing terrorist acts, and if prevention fails, limiting mass casualties.
- Identifying vulnerabilities that could be exploited by threat groups and recommending options to eliminate or reduce those vulnerabilities.
- Concentrating on areas identified by the commander as being essential to mission accomplishment.

Protective Services Operations

Commanders may be required to perform PSO to reduce individual or group vulnerability to terrorist attack. To assist in PSO, CID and military police provide personal security for key US Government leaders, flag officers, and civilian dignitaries. Depending upon availability and completion of the US Army Protective Service Training Course, CID may coordinate PSO for Marine Corps commands. In addition, CID and military police may also support HN and foreign law enforcement PSO.

Nonlethal Weapons

Military police are trained to use the lowest level of force necessary to control incidents in war, peace, civil support, and stability operations. Because military police use NLWs daily in the performance of their law enforcement missions, their skills are highly developed for NLW use in military operations.

Military police are the Marine Corps' primary user of NLWs and munitions, MWDs, and crowd control devices, such as the riot baton. The traditional MP role in crowd control and LOO requires the use of NLWs under certain conditions and under restrictive SROE. Accordingly, military police use of NLWs affords the MAGTF commander additional flexibility and options for action.

Military police also provide the commander a force that can function as a training cadre for the application of NLWs. Military police attend the Interservice Nonlethal Individual Weapons Instructor Course (INIWIC), which is the only formal DOD nonlethal training course. Marine Corps military police are directly involved with the INIWIC and in the development of DOD NLW doctrine. They incorporate applicable NLW capabilities into programs of instruction for both the instructor- and user-development

courses. The INIWIC is designed to provide commanders with instructors that are well-trained in the employment of NLWs, who, in turn, can train their Marines.

Because of restrictions imposed under international law, limitations may apply to the use of certain NLWs, depending on the nature of the operation. For example, the United States *Chemical Weapons Convention* prohibits the use of riot control agents, including OC [Oleoresin Capsicum] (also known as pepper spray), as a method of warfare in certain operations. Those operations may include consensual peacekeeping and peace enforcement operations in accordance with the Charter of the United Nations, *Chapter VII, Action with Respect to Threats to the Peace, Breaches of the Peace, and Acts of Aggression*. Restrictions, as well as permissive use, may be addressed in the rules of engagement, but military police should consult with the cognizant SJA for guidance if there is any doubt regarding the use of NLWs. Refer to MCWP 3-15.8 for more information.

Military Working Dog Operations

Special MWD capabilities significantly enhance the commander's ability to protect forces and assets. Chapter 5 addresses MWD operations in more detail.

Biometrics

The protection of information and physical assets is vital to the national security of the United States, and biometrics—methods of human identification using physiological or behavioral characteristics—can enhance national security and provide a higher level of identity assurance by augmenting security systems.

In the MP community, CID and physical security specialist are the primary users of biometrics. The CID uses biometrics for site and evidence exploitation, investigations, forensics, and evidence collection and processing. The CID and physical security specialists provide biometrics subject matter expertise for the MEF. Physical security specialists provide biometrics for access control, electronic security systems, intrusion detection systems, and automated access control systems. Biometrics may also be used in detainee operations and include physiological, behavioral, and authentication applications as follows:

- Physiological biometrics include the following:
- Iris.
- Fingerprint, including the nail.
- Hand, including the knuckle, palm, and vascular.
- Face.
- Voice.
- Retina.
- DNA [deoxyribonucleic acid].
- Odor.
- Earlobe.
- Sweat pore.
- Lip.
- Behavioral biometrics include the following:
  - Signature.
  - Keystroke.
  - Voice.
  - Gait.
- Authentication biometric-based applications include the following:
  - Workstation.
  - Network and domain access.
  - Single sign on.
  - Application logon.
  - Data protection.
  - Remote access to resources.
  - Transaction security and internet security.

Law and Order Operations

Military police conduct LOO to provide commanders a lawful and orderly environment. They also implement proactive law enforcement measures to reduce opportunities for crime and terrorism. The conduct of LOO supports mission assurance. Chapter 4 addresses LOO in more detail.

Antiterrorism

Antiterrorism support provided by the military police includes conducting training and crime prevention and providing physical security capabilities. An MP officer assigned to a MEU or SPMAGTF staff is qualified to function as the MAGTF mission assurance officer and is responsible for coordinating antiterrorism training, planning, and execution. The MP officer suggests ways to detect and defeat the terrorist threat and the MP detachment provides the commander with antiterrorism capabilities.

Training

Antiterrorism training provided by military police to individual units includes—

- NLWs.
- MP mission-oriented training for Marines assigned as in-lieu-of forces.
- MP and law enforcement training to develop the necessary skills to accomplish a mission.

Chapter 7 addresses training in more detail.

Crime Prevention and Physical Security

Crime Prevention

Military police provide commanders with crime prevention plans that include prevention, enforcement, and education on recognizing, countering, and preventing criminal and terrorist activities. As part of crime prevention, military police investigate and report criminal activities that will assist the commander in maintaining unit order and discipline. Appendix C provides crime prevention checklists.

Physical Security

Physical security provided by military police includes—

- Employing physical measures designed to safeguard personnel.
- Preventing unauthorized access to equipment, installations, material, and documents.
- Safeguarding personnel against espionage, sabotage, damage, and theft.

Normal MP involvement in physical security is limited to providing units advice for security in their AO. When assisting in security enhancement planning, military police provide practical and executable advice on the use of physical security equipment that may include—

- Perimeter barriers.
- Protective lighting.
- Security containers.
- Locking mechanisms.
- Intrusion systems.
- Personal identification.
- Access control.
- Movement control.

Appendix C provides physical security checklists.

Critical Infrastructure Protection

Critical infrastructure protection is a risk management program that focuses on determining the risk of loss to the Marine Corps' critical assets and infrastructures from all threats and hazards. It assesses the resultant impact on the ability to execute and sustain core capabilities, missions, and functions and comprehensively manage risks.

Military police conduct assessments (see Assessments, page 3-2) and make recommendations to commanders on actions that can be taken to prevent, remediate, or mitigate the risks resulting from the determination of vulnerabilities of critical infrastructure assets. Depending upon the risk, these actions could include changes in tactics, techniques, and procedures (TTPs), adding redundancy, selection of another asset, isolation, hardening; or guarding.

Additional support to critical infrastructure protection is provided by MP physical security specialists, who assist in the design and employment of physical security intrusion detection systems, electronic security systems, barrier plans, and access control systems to reduce risk.

CHAPTER 4
LAW AND ORDER OPERATIONS

Law and order operations are important to maintaining combat readiness and efficiency. A key factor in the success of these operations is the MP's ability to use and apply the force continuum (see fig. 4-1), identify probable cause, and operate with restraint under designated authority. Military police have the authority to enforce laws, directives, and regulations; conduct criminal and traffic accident investigations; and control populations and resources to provide commanders with a lawful and orderly environment. They also implement proactive law enforcement measures to reduce opportunities for crime and conduct LOO within their authority and jurisdiction. While military police may have the authority to apprehend a suspect, the military may not have jurisdiction to adjudicate charges. The concept of jurisdiction discussed in this chapter refers to the authority of military police to apprehend military personnel and to detain civilians.

Law and order operations that are implemented by military police include the following:

- Authority.
- Jurisdiction.
- Command and control.
- Law and order functions.
- HN LOO support (e.g., training, police station operations).

Authority

Authority is the lawful right of designated persons or agencies to exercise governmental power or control. The authority of the military police to enforce military law, orders, and regulations by apprehension or detention, if necessary, is derived from the President, as Commander in Chief of the United States, and the Uniform Code of Military Justice (commonly referred to as UCMJ). The UCMJ specifies the types of persons that are subject to its provisions and articles.

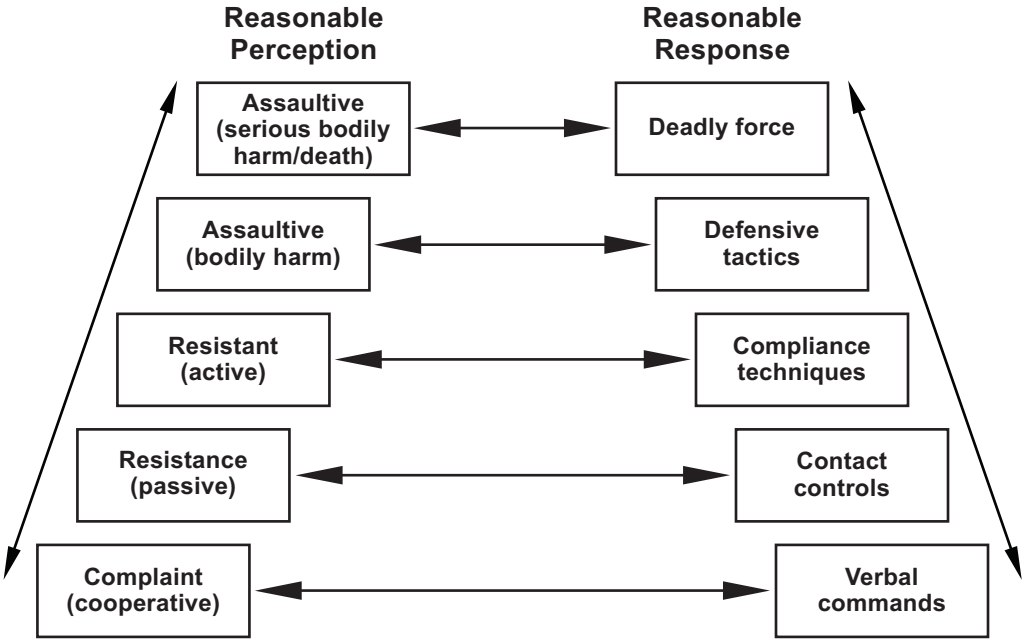

Figure 4-1. Force Continuum Model.

The continental United States (CONUS) authority of the military police over persons other than those subject to the UCMJ is derived from Federal law and the policies and orders of the military commander.

The outside of the continental United States (OCONUS) MP authority is founded in the laws of the country concerned, international agreements, and the UCMJ. In some countries, a SOFA authorizes one government to take action in cases where both governments could take action. In the absence of an international agreement or SOFA provisions that provide otherwise, MP authority may be limited. Military police should consult with the cognizant SJA for advice on MP authority OCONUS.

Persons Subject to Uniform Code of Military Justice

The UCMJ, as established by Congress, provides one basic code of military justice and law for the Military Services. The code authorizes the President of the United States to set rules of evidence, pretrial, trial, and posttrial procedures and to maximum punishments for violations of the UCMJ. Under this authority, the President issues the *Manual for Courts-Martial United States*. This publication is an executive order implementing the provisions of the UCMJ and primary source document for matters relating to military justice and establishing the military law of evidence.

Active duty military personnel, as well as some retired members and other personnel enumerated in Article 2 of the UCMJ, are subject to the provisions of the UCMJ. Military police have the authority to take appropriate action with persons subject to the UCMJ. This authority is not limited to military reservations or Federal property.

Persons Not Subject to Uniform Code of Military Justice

Commanders and military police are advised to consult the local SJA concerning the circumstances warranting detention of persons not subject to the UCMJ. In areas under military jurisdiction or control, military police may detain the following persons who are not in the Military Services or subject to UCMJ:

- Persons found committing a felony or a misdemeanor might be detained long enough to be turned over to civil authorities.
- Persons found violating properly promulgated military regulations.
- Persons cited for violating the Assimilative Crimes Act, not including felonies or breaches of the peace, might be referred to a US magistrate.
- Civilians may be subject to military authority in situations involving martial law or hostilities.

Persons Subject to Posse Comitatus Act

Within the United States, the Posse Comitatus Act (PCA) generally limits direct military involvement with civilian law enforcement. Department of Defense directive 5525.5, *DOD Cooperation with Civilian Law Enforcement Officials*, also provides guidance in this area, as does Secretary of the Navy instruction 5820.7C, *Cooperation with Civilian Law Enforcement Officials*. Although the PCA does not apply to the use of armed forces abroad, DODD 5025.5 applies PCA restrictions to extraterritorial military assistance to law enforcement. In case of compelling or extraordinary circumstances, the Secretary of the Defense may consider exceptions to the prohibition of direct military assistance to law enforcement outside the territorial jurisdiction of the United States.

The PCA restrictions are divided into three broad categories—use of information, use of equipment and facilities, and use of military personnel. These restrictions are governed by a complex set of regulations and are highly nuanced. Some direct assistance by military personnel is strictly prohibited as follows:

- The interdiction of a vehicle, vessel, aircraft, or similar activity.
- A search or seizure.

- An arrest, apprehension, stop and frisk, or similar activity.
- The use of military personnel for surveillance or pursuit of individuals, as undercover agents, informants, investigators, or interrogators.

Military authorities may provide some permissible direct assistance or training, information, equipment, or expert advice; but such assistance will depend on the specific facts, circumstances, and statutory or regulatory authority. For example, Military Purpose Doctrine addressed in the *Domestic Operational Law Handbook for Judge Advocates*, covers actions where the primary purpose is to further a military interest, such as investigative actions related to the enforcement of the UCMJ. Another example is DODD 3025.12, *Military Assistant for Civil Disturbances*, which requires presidential authorization for the use of military forces, except in limited emergency circumstances. Commanders and military police should consult with their cognizant SJA before providing support to civilian law enforcement.

Jurisdiction

Military jurisdiction is the extent of and limitation on the rights of an armed force to exercise authority and control over persons and offenses (i.e., limits the exercise of authority). The jurisdiction of every offense or incident depends upon the status of the suspect, international agreements and treaties, military interest in the offense, and other factors (e.g., legal, administrative, actual offense, civilian intent in the case, media interest). Military jurisdiction is exercised through the application of military law, orders, and regulations and extends to military personnel whether or not they are in an area under military control. The military may have exclusive or concurrent jurisdiction to try persons subject to the UCMJ regardless of where the offenses are committed, while civil jurisdiction is exercised through the application of Federal and state law.

Under international law, the HN normally has primary jurisdiction to prosecute nonmilitary offenses committed within its borders by members of a visiting force. This authority may be further defined or surrendered to military authorities through SOFAs and other treaties or agreements, depending upon the nature and circumstances of the offense. This limitation to prosecute does not prohibit commanders from taking administrative action against suspects. The SJA should be consulted when questions exist concerning military jurisdiction. While conducting LOO in geographic areas, military police operate under exclusive, concurrent, and proprietary jurisdictions.

Exclusive Jurisdiction

Under exclusive jurisdiction, the US Government assumes sole jurisdiction over the designated area. Many military installations have exclusive Federal jurisdiction. On these installations, the Federal Government exercises executive, legislative, and judicial authority. To facilitate exclusive jurisdiction and to avoid the difficult task of enacting and maintaining a code of criminal laws appropriate for areas under its jurisdiction, Congress passed United States Code, Title 18, *Crimes and Criminal Procedure*, part I, chap. 1, sect. 13, *Laws of States Adopted for Areas Within Federal Jurisdiction*. This statute, based on the Federal Assimilated Crimes Act (FACA), provides that all acts or omissions occurring in an area under Federal jurisdiction, which would constitute crimes if the area were under state jurisdiction, will constitute similar crimes, similarly punishable, under Federal law. This act does not assimilate crimes based upon state statutes that are contrary to Federal policy and law, such as civil rights legislation, nor does it assimilate state law if there is an existing Federal statute or law on the subject.

Concurrent Jurisdiction

Concurrent jurisdiction exists when the US Government and the state or local governments exercise simultaneous authority over an area.

Essentially, this type of jurisdiction is dual jurisdiction. Under dual or concurrent jurisdiction, state criminal laws are applicable in the area and can be enforced by the state, as well as the Federal Government, under FACA.

Proprietary Jurisdiction

Proprietary jurisdiction applies in instances where the US Government has ownership to an area but has not retained jurisdiction. In this case, the US Government has the same rights as any other landowner. The state retains jurisdiction over the area and has the authority to enforce laws in the area. The FACA does not apply to areas of Federal proprietary jurisdiction. In such areas, military police exercise authority in compliance with the instructions of the appropriate commander.

Command and Control

The commander determines when MP assets are needed and can be afforded for dedicated LOO. When required by the commander or when battle intensity permits, the commander typically employs military police for limited LOO and to conduct LDO. Military police will typically conduct a full-scale dedicated LOO before an operation begins and after the AO has matured. In a peacetime environment, military police conduct extensive LOO.

Military police performing LOO enhance the commander's combat readiness, efficiency, and command and control by—

- Preventing the diversion of military resources, thereby aiding in the maintenance of combat strength.
- Suppressing opportunities for criminal behavior.
- Assisting and protecting forces.
- Preserving good order and discipline.
- Assisting intelligence organizations in obtaining a complete tactical intelligence picture by collecting and providing criminal and operational data and information.
- Providing liaison to civil or military law enforcement agencies.

Law and Order Functions

Military police will often conduct LOO simultaneously with other tasks. They also implement and perform physical security measures for designated critical assets, crime prevention measures, and selective enforcement measures as part of their mission assurance support and other tasks.

Crime is detrimental to MAGTF operations and can cause a severe deterioration in morale. Military police assist the commander in curtailing and eliminating criminal activities by enforcing law and order and preserving good order and discipline. Based upon the MAGTF commander's concept of operation, military police employ the following LOO functions:

- JPEC establishment and operation.
- Law enforcement.
- MWD operations.
- Traffic enforcement and investigations.
- Criminal investigations.
- Crime prevention and physical security.
- US Customs support operations.
- Police intelligence operations.
- Joint, multinational, and HN police operations.

Joint Prosecution and Exploitation Center

Military police perform a critical role in the establishment and operation of the JPEC. The JPEC supports HN security forces' development of internationally accepted criminal investigative and forensic practices and also synchronizes

multinational force intelligence and criminal prosecution efforts associated with—

- Detainees and detainee-related evidence.
- Site and evidence exploitation.
- Document exploitation.
- Criminal investigation and other battlefield material.

Law Enforcement

An efficient and effective law enforcement effort eliminates the conditions and opportunities that promote crime. Successful law enforcement operations maintain combat readiness and efficiency by preventing the diversion of personnel and resources to fight crime and by maintaining military discipline. Marine Corps Order (MCO) 5580.2B, *Law Enforcement Manual*, provides specific guidance concerning the establishment of law enforcement operations aboard Marine Corps installations and may be used in tactical situations or serve as the basis for development of appropriate law enforcement TTP.

Patrol Operations

The key to an effective law enforcement effort is an aggressive MP patrol operation. The method of MP patrol depends upon the mission, number of military police available, terrain, time of response, and level of HN support. Military police establish patrols to—

- Meet prescribed objectives.
- Protect designated resources.
- Identify and apprehend or detain offenders.
- Provide a deterrent and/or presence and prevent crimes.
- Provide an ability to respond quickly.

Desk Operations

Military police establish desk operations to—

- Coordinate and document MP patrol activity.
- Receive complaints and calls for assistance.
- Refer incidents to the appropriate investigative agency for further action.

Military Working Dog Operations

Military working dog teams enhance the effectiveness of law enforcement operations with capabilities to detect explosive devices, explosive residue, and controlled substances and to detect, track, control, and apprehend personnel. They are used in peacetime environments to extend MP resources and contribute to the detection, investigation, and prevention of criminal activity. The MWD teams support a variety of MP operations, which are discussed in chapter 5.

Mission support requirements determine the number of functional MWD teams that make up a wartime, mission-oriented MWD team. During wartime operations, MWD teams—

- Help detect and deter the enemy.
- Support force protection operations by augmenting security forces and assisting in the protection of key personnel.
- Support population control by augmenting dislocated civilian (DC) and crowd control forces.
- Assist in temporary internment operations.

Traffic Enforcement and Accident Investigations

Traffic accidents account for a large number of deployed military casualties. Military police help to reduce the number of noncombat traffic accident casualties (i.e., civilian and military) and loss of equipment through enforcement of HN and command traffic regulations (i.e., commander's MSR regulation measures). As accident investigators, military police also assist HN or other authorities investigate accidents involving US personnel or property.

Types of Accidents Investigated

Providing they do not interfere with the tactical mission or mission-essential operations, the

types of accidents military police investigate include those—

- Resulting in the fatalities of US military personnel.
- Involving US military personnel and equipment, as well as HN persons and/or property.
- Involving substantial vehicle damage and/or multiple vehicles.

Investigative Services

Through the investigation of traffic accidents, military police serve to—

- Identify the personal, environmental, and equipment factors that caused or contributed to the accident.
- Document the facts of the incident for criminal or civil actions that may result from the accident.
- Expedite HN litigation.

Traffic Enforcement Measures

Based upon the operational and political environment, traffic enforcement measures may include—

- Traffic circulation plan development.
- Operator license and dispatch checks.
- Safety inspection checkpoints.
- Vehicle load and route restriction enforcement.
- Speed control measures.

Main Supply Route Regulation and Enforcement

Military police units support the commander's MSR regulation measures as stated in the established traffic regulation plan, the unit's SOPs, or command directives. They provide MSR regulation enforcement to keep the routes within a commander's AO free for priority tactical and sustainment operations and by controlling highway traffic activities to support military force movement. Enforcement efforts focus on ensuring that only authorized traffic uses controlled MSRs.

The traffic regulation plan contains specific measures to ensure smooth and efficient use of the road network (e.g., classified routes are used only by authorized traffic within their timetable schedule, vehicles are prevented from traveling on roads that are too narrow for their passage or will not support their weight) to ensure that the route remains unobstructed. The plan also assigns military route numbers and names, direction of travel, highway regulation points, and preplanned MP traffic control points (TCPs).

Military police use TCPs, roadblocks, checkpoints, holding areas, and defiles at critical points to monitor MSRs and enforce command regulations. Mounted MP teams patrol between static posts to observe traffic and road conditions, to gather information on friendly and enemy activity, and to assist stranded vehicles and crews. Military police units place temporary route signs to warn of hazards or to guide drivers unfamiliar with the routes. Using these measures, MP units exercise jurisdiction over the road network in the AO and, when possible, will coordinate with the HN to expedite movement on MSRs. Any changes in road condition and enemy activity along MSRs are reported immediately through MP channels.

Military police units employed with engineer, logistic, explosive ordnance disposal, and aviation forces may establish movement corridors to provide secure movement of military traffic through uncontrolled terrain. Based upon published movement tables, the combined movement corridor forces will open a safe passage route through uncontrolled terrain.

Criminal Investigations

Crimes occurring within an AO may require an in-depth investigation. Military police investigate offenses committed against US personnel or property, and occasionally crimes committed by HN citizens. There are two types of criminal investigations on the battlefield—minor crimes (e.g., petty theft) or major incidents and serious

offenses (e.g., alleged war crimes). Minor crimes are usually investigated by military police or MPIs. Major incidents and serious offenses, especially those involving death, serious bodily injury, and/or war crimes, are referred to CID. The CID investigative authority originates from the PM or from the commander to whom the CID element is attached.

The NCIS role varies and will be dependent upon the operation. The CID investigators provide criminal investigative support to commanders, including investigation, fingerprinting, evidence collection, and exploitation. When authorized, CID personnel initiate the appropriate criminal investigations during these operations, conduct interrogations as required, and conduct criminal intelligence operations in support of PIO.

The commander immediately notifies the chain of command, the SJA, CID, or NCIS upon receiving information concerning alleged war crimes committed by Marines. The CID will notify NCIS as appropriate. It is extremely important that alleged war crimes be investigated promptly by CID or NCIS and not by an investigating officer appointed by the command. Close coordination between the SJA, CID, and NCIS during war crime investigations is essential.

Commanders are prohibited from interfering with the investigations or impeding the use of investigative techniques. When a commander objects to the opening of a criminal investigation of a serious incident for operational or other reasons, that commander must report the circumstances immediately via the chain of command—Security Division, Plans, Policies, and Operations—to the Commandant of the Marine Corps.

Joint investigative activities, such as drug or blackmarket suppression teams, may involve investigators from NCIS, CID, military police, or other US Services or agencies, and may require close liaison and cooperation with HN or allied civil or military agencies.

Crime Prevention and Physical Security

Crime Prevention

Crime prevention is accomplished through a heightened degree of awareness and education. Units aware and educated on the detrimental effects of criminal activities often police themselves to maintain unit integrity and morale. Military police provide the commander with awareness programs, as well as instruction and information on recognizing, countering, and preventing criminal activities.

The objective of crime prevention is to provide a secure environment for military personnel operations. Crime prevention employs proactive measures aimed at protecting persons and property. A successful crime prevention effort focuses on the number, type, location, and causes of crimes being committed. After causes are identified, military police employ preventive techniques by planning, implementing, evaluating, modifying, and developing new crime prevention measures.

Physical Security

A strong physical security program supports the crime prevention effort by helping to identify, reduce, eliminate, or neutralize conditions favorable to criminal activity. As part of the overall physical security effort, military police conduct physical security inspections and surveys of designated mission-essential or vulnerable activities within a command. Physical security inspections and surveys also identify measures to reduce the opportunity and desire for engaging in criminal acts.

Physical security measures supplement the mission assurance process and enhance the overall defensive posture. Trained force protection and physical security personnel, using current information and technology, can provide the commander a defense in depth (e.g., security posts, barriers, access control, electronic security systems, identification controls, technology, biometrics) against

identified and perceived threats. Physical security personnel support the mission assurance process by assessing vulnerabilities and conducting a physical security survey.

A physical security survey is a systematic evaluation of a facility or activity's overall security. Physical security personnel identify security deficiencies and recommend active and passive corrective measures through surveys. A physical security survey addresses—

- Structural design information and deficiencies (e.g., walls, doors, ceilings).
- Tactical employment of physical barriers and obstacles.
- Preventive and compensatory security measures and procedures.
- Employment of physical security aids, equipment, and devices (e.g., lighting, fencing, locks, key and lock control, portable electronic security measures).
- Access and control procedures of US and HN civilian and military personnel and equipment within an AO.

In addition, physical security specialists provide subject matter expert support in the use of biometrics in physical security applications. Biometrics are utilized in access control, electronic security systems, intrusion detection systems, and automated access control systems.

US Customs Support Operations

Military police provide customs support and border control to ensure units and individuals comply with CBP, other US Governmental agencies, and USDA requirements. In the absence of CBP personnel, customs-certified military police, often aided by MWD teams, conduct military customs inspections to enforce US customs laws and regulations. While conducting customs support operations, military police may be required to establish and operate or assist HN authorities with border security operations. Border control is maintained for—

- Security.
- Customs and tariff enforcement.
- Protection of the civilian economy.
- Apprehension of criminals, absentees, terrorists, and persons of intelligence interest.

Control is maintained through the establishment of authorized road or rail crossing points, border patrols, and control posts. Essential to the success of these operations is constant liaison with HN and neighboring country authorities. Military police conducting these operations will—

- Establish the identity of US military members crossing borders, determine the purpose of travel, and examine vehicles and travel documents.
- Instruct US military members to make oral or written customs declarations as required.
- Conduct searches of vehicles, luggage, and any other property being imported or exported by US military personnel.
- Seize contraband items that are in violation of customs regulations.

Appendix A addresses customs support operations in more detail.

Police Intelligence Operations

Success in MP LOO relies upon the use of essential information and intelligence, which aids in the crime prevention and criminal investigation process. While performing PIO, military police collect, analyze, and disseminate information and intelligence as part of other missions.

The MP information operations complement the command intelligence program by integrating information with military intelligence and providing the commander with a complete and relevant intelligence picture for military operations. Military police use TQ while conducting PIO. Department of Defense directive 3115.09, *DOD*

Intelligence Interrogations, Detainee Debriefings, and Tactical Questioning, provides detailed information concerning TQ.

Joint, Interagency, Multinational, and Host Nation Police Operations

Military police LOO may involve patrols with joint, interagency, multinational, HN military or civilian police, or a combination of these groups. The SOFA, SRUF, SROE, rules of interaction, force continuum, and other guidance have an impact on MP LOO activities. When conducting these LOO, military police must maintain constant liaison with other DOD police organizations, HN authorities, and allied police agencies to develop employment options that best support MAGTF operations. As part of these operations, military police may, in situations where the local national authority has deteriorated or been eliminated, provide assistance and training to HN military and civilian police forces or assist in the creation of these forces as authorized by competent authority.

Joint investigative activities, such as drug or black market suppression teams, may involve investigators from NCIS, CID, military police, or other US Services or agencies. Such operations may require close liaison and cooperation with HN, allied civil, or military agencies. The CID investigators also work closely with counterintelligence teams, pooling their resources to gather information on certain activities (e.g., underground activities, terrorist groups, black marketing). In addition, CID investigators are trained to handle hostage incidents, hostage negotiations, and related terrorist incidents.

Host Nation Law and Order Operations Support

Military police HN LOO support includes training and police operations support (e.g., station setup, administration, evidence collection, storage, and processing).

Host Nation Police Training Programs

Authorized police training programs for HNs should be targeted to the level of officer that is being trained. Senior police officer level training should address those things relevant to the administration of effective police operations, including planning, personnel, logistics, training, and police information operations. Basic police officer training should focus on police skills that would be most beneficial to them, including unarmed self-defense, weapons training, and application of restraints.

There are several categories of team and police training categories. Those categories are—

- Transition teams training.
- Police transition teams training.
- Executive level training.
- Mid-level police supervisor training.
- Basic police officer training.
- Field training officer (FTO) program.
- Support personnel training.
- In-service training.

Transition Teams Training

The primary mission of transition teams is to advise the security forces in the areas of intelligence, communications, fire support, logistics, and infantry tactics. The intent is to make HN forces capable of conducting independent counterinsurgency operations tactically, operationally, and logistically. When executing military operations, transition teams call for US close air support, indirect fire, and medical evacuation as necessary. They also perform the critical role of liaising between the foreign unit and nearby US units to ensure that each unit is aware of and can assist the other in their operations. Transition teams also monitor and report on the capabilities of the fledgling security force. They work with their HN counterparts to enhance the understanding of the rule of law and fundamental human rights.

Note: In both Operation Enduring Freedom and Operation Iraqi Freedom, the transition teams are considered a central part of the strategy to train and equip national security forces. One of the primary missions of the US military in Iraq is the training of competent Iraqi security forces. By the end of 2006, transition teams had assisted in the training and equipping of approximately 326,000 Iraqi security services. That figure includes 138,000 members of the Iraqi Army and 188,000 Iraqi police and national police forces.

Police Transition Teams Training

Police transition teams provide a similar function for the HN police forces. These teams vary greatly in size based upon the AO and level of threat. They may include military police units and contracted civilian personnel.

Executive Level Training

The US forces tasked with training HN police personnel must ensure that HN police forces have capable management in the top ranks. Military police leaders should consider assigning experienced senior MP personnel to positions with their HN police force counterparts to serve as executive trainers and advisers. Military police planners, working with police experts from the Department of Justice and the Department of State, should also develop formal training programs for executive level police personnel. Executive level personnel will require knowledge of general administration and the internal functions of the organization in order to manage the ongoing operations of a large police organization. Executive level police training considerations include the following:

- Recruiting police officers and staff.
- Managing police records. This includes case file management and statistics on various police data (e.g., calls for service, location of incident, time of incident, day of the week of the incident, category of incident [e.g., accident, request for assistance, robbery, murder], demographics of the victims and perpetrators, affiliations of the victim and perpetrators).
- Conducting internal affairs operations. This function ensures professional standards are maintained and that officer violations and internal security issues are investigated. Pre-employment investigations may also be aligned under this function.
- Distributing and scheduling patrols and planning special events.
- Planning contingency operations.
- Developing criminal information and intelligence.
- Staffing and training specialty sections. These sections include patrol, criminal investigations, special reaction team, and traffic.
- Managing police desk operations. This includes supervision and monitoring desk and communications operations, such as dispatch and electronic communications.
- Managing an evidence room. This includes evidence collection requirements, chain of custody documentation, and processing and control of evidence stored in the evidence room.
- Issuing and controlling police credentials. Issued credentials must be strictly controlled with credential data and personnel information stored in a secure location and/or database.
- Managing licensing and permit functions.
- Managing jail facilities.
- Managing court liaison requirements. The court liaison coordinates for prisoner pretrial release, transfer of prisoners to permanent detention facilities, and case preparation.
- Establishing SOPs. Procedures are required to maintain order, professionalism, and credibility within the organization. The SOPs may include—
  - Police procedures.
  - Uniform and equipment standards (e.g., uniform appearance, accessories, weapons, duty equipment).
  - Vehicle equipment requirements.
  - Radio protocols.

- Protection equipment (e.g., helmets, vests, chemical protection equipment).
- Desk operations.
- Jail operations.

- Providing logistic training. Training should be focused on how to understand and manage the various aspects of logistical support required for the organization. At a minimum, training should include the following:
  - Budget training.
  - Procurement of equipment and services.
  - Maintenance operations (e.g., vehicle fleet, communications equipment).
  - Supply operations (e.g., supply distribution, accountability of equipment, establishing a supply and/or logistic discipline program).
- Maintaining a comprehensive training program. At a minimum, a police training program should include the following:
  - Preservice training.
  - In-service training.
  - Mid-level and senior-level management training.
  - FTO.

Mid-level Police Supervisor Training

The HN police force units only become effective when their leaders and staffs can effectively plan, prepare, execute, and assess police operations. The training program for mid-level managers should include the professional development that is necessary to maintain management proficiency, consistent application of policy, and dissemination and understanding of organizational goals and objectives. Initial mid-level police supervisor training should focus on building effective leaders and staffs for small units, then progressively move into higher echelons of supervisory training. Both executive and mid-level training should be focused at the police station level. A cadre of carefully selected low- and mid-level police leaders can be provided an advanced level of education at formal strategic-level schools. This cadre can, upon their return home, assume leadership positions, and become faculty for HN schools. However, these programs are expensive and time-consuming.

Basic Police Officer Training

If possible, basic police officer training should occur in established training academies with standardized programs of instruction. The training should be conducted by experienced law enforcement personnel on basic police procedures, weapons proficiency, and survival skills. During initial training, law enforcement trainers must observe and conduct the training. More experienced HN police are selected as assistant instructors and demonstrators. Over time, the HN assistant trainers will become the primary trainers. The majority of the training is hands-on practical exercise training.

Field Training Officer Program

The FTO program is on-the-job training directed at new police officers. This training is executed with an experienced police officer certified as an FTO, in order to ensure that new police officers are trained and evaluated and can meet established standards. The standards should be extracted from a critical task list and administered by an FTO who is familiar with police protocols and the patrol sector in which the trainee is being trained and evaluated. The senior MP officer present establishes FTO program certification standards and critical tasks based upon mission analysis of requirements for the location of the program.

Support Personnel Training

Police forces, just like military forces, need support personnel in order to be effective. This requires training teams in support of these functions. Specially trained personnel required by police forces include armorers, supply specialists, communications personnel, administrative personnel, and vehicle mechanics. Support personnel should not be counted against the number limit of sworn HN police officers, as they do not conduct law enforcement activities.

In-service Training

In-service training is a periodic refresher and professional development training provided to all officers throughout their service. The SOP establishes the frequency and number of hours required. The length and location of in-service training may range from 15 minutes during guard mount to extended periods on specialized training sites. Training should be based upon assessments conducted by police management and supervisors; and it is driven by observations and objectives identified by mid-level and senior leaders.

Subject areas of in-service training may include weapons proficiency, ethical conduct, officer survival, and identification of threats or criminal activity. Leadership may often use in-service training as a venue to focus on policy changes or reinforcement, identified shortcomings in performance, new equipment, or special events training. Subjects are limited to the needs of the organization. Training should be focused on patterns, trends, and tactics of criminal and other threats (e.g., insurgents, transnational criminals that may be active in the area). This information is critical for police officers to understand in order to effectively and efficiently counter the threat and achieve their mission objectives.

Host Nation Police Station Support Operations

A police station is most effective when support operations (e.g., police station requirements and protection, administration, personnel, evidence processing, highway patrol) are streamlined and developed to work in concert with the efforts of the police officers.

Police Station: Renovation, Rebuilding, and Protection

During the initial standup of police stations, different types and sizes of stations should be established based upon a mission, enemy, terrain and weather, troops and support available-time available.

Effective policing requires a base of operations from which police forces can operate. The police station provides a static, recognizable landmark for the public to access the police with reports and complaints or to provide and receive information necessary to the maintenance of a stable environment. In many operations, military police will be faced with situations where little or no police infrastructure is present. This may be attributed to long-standing neglect, inadequacies on the part of the HN, natural disaster, or combat operations.

During operations where significant destruction attributed to natural or manmade disaster or where adequate police infrastructure does not exist, renovation or rebuilding of police stations is critical. Military police, in conjunction with civil affairs, other multinational forces, governmental agencies, and the HN forces, must assess the existing police structures and requirements for possible new structures and to coordinate for construction support.

If required, military police must provide input for the creation of a statement of work. The statement of work must address all construction requirements for the police station, including discussion of protection requirements.

Regardless of the physical structure or layout of the various police stations, basic protection measures need to be in place before police operations begin. Police personnel and facilities are often targeted by criminals, terrorists, and insurgents; therefore, police personnel, equipment, and facilities require robust security and protection measures. Many of these measures may take weeks or months to construct. Protection measures include:

- Protection in depth.
- Standoff distance.
- Access control.
- Barriers and blast mitigation.

Notes: In order to be most effective, police stations must be closely linked to a court system to adjudicate the offender and a prison facility to incarcerate the convicted.

Vehicle impound lots must also be a planning consideration in the establishment of police stations. Police require locations to secure seized vehicles and property being held for evidentiary value. Stations should have a centralized lot that supports a number of stations (e.g., at the district level), a temporary lot, and a lot constructed for long-term storage.

Police Station: Administration

Military police assist in the establishment of administration and personnel functions (e.g., developing forms, processing procedures) and setting standards for daily operations (e.g., supply systems). Personnel must be familiar with the scope of police powers, authority, and jurisdiction. Reference materials should be on hand for quick reference and offense codes should be established for use in recordkeeping and administrative action. Patrol reports and security checklists (see app. C) must be developed and used to record pertinent information and activities. Military police should not force the use of US forms since the use of existing or development of new local forms will give ownership to the HN police force. The US forms may be used if there is no existing form that meets a requirement and the local police officials agree to adopt the form in-lieu-of creating their own version. An organizational supply system is a key part of police operations. Military police can assist in the development of logistical accountability systems, acquisition of supplies, and recordkeeping requirements as follows:

- Maintenance procedures and service agreements for maintaining fleet operations and equipment.
- Policy letters and SOPs to standardize supply and maintenance operations, desk operations, police administration functions, database management, and evidence procedures.
- Guidelines for maintaining readiness, benchmarks for organizational goals, and reasonable standards for LOO training that ranges from basic to advance tactics and procedures.
- Communications protocols, such as call signs and radio procedures for daily communication, operations security procedures, information systems security procedures, and communications security measures.
- Public affairs procedures by establishing guidelines and methods regarding release of information to the media while protecting the public and not compromising ongoing operations. The intent should be to tell the “good news story” to show where progress is being made.

Police Station: Personnel

Police Officers. Police officers responsible for evidence collection and storage should receive training in crime scene processing. Personnel selected for these positions should be experienced officers.

Police officers should be specifically identified to work juvenile cases. Care must be exercised to process and handle juvenile offenders separately from adult offenders.

An interpreter should be provided for MP operations (i.e., training, mentoring, and conducting joint operations) with HN police personnel. Any interpreter selected to translate in police operations must receive a background check, be cleared by the appropriate authority, and be trained by MP leadership or police assistance team on specific police procedures and operations.

Support Personnel. The successful management of a police station depends upon administrative specialists, recordkeepers, budgeting personnel, personnel specialists, facilities personnel, and custodial staffs. These critical staff positions should not count against the number of sworn positions identified for the individual police stations. Support positions do not require sworn police officers nor do they require any police training. However, they do require some level of security clearance and a background investigation.

Dispatchers and others working at the control or dispatch center should receive training in dispatch procedures and be graduates of a police academy. They must also receive training in administrative functions to allow them to track and record police operations as they occur. Dispatchers prioritize and dispatch responding patrols with guidance from the shift and desk supervisors.

Other personnel essential in sustaining police operations include mechanics, electricians, and communications and supply specialists. All police stations should have a maintenance facility and motorpool within the police department compound. The supply specialist should be trained in equipment issuance, accountability, and procurement measures.

Police Station: Information Systems Development and Management

Common crime information databases greatly improve interoperability among local HN police agencies and can link them to international police intelligence sources, such as Interpol (the world's largest international police organization). Military police provide the capability to train foreign military and civilian police concerning the establishment of police information files and automated police databases. Developing and sharing police information with the appropriate HN and international agencies is crucial in environments where criminals (e.g., terrorists, insurgents) threaten stability. Military police coordinate these efforts with international police and intelligence agencies.

Systems Development. Military police or contractors train HN police and provide initial training to forces in the development and management of police information systems. In countries where the government, including its law enforcement entities, has been precarious and/or corrupt, there may have been no development or management of police information. If a database (i.e., automated information system) does exist, military police should assess whether the existing system is functional and if so, commence training and incorporation as soon as possible. An existing system provides local familiarity and cultural considerations, but if no system exists, military police or contractors must assist in developing and managing a police information system that will be executable within the skill, experience, and cultural parameters of the HN police personnel. Considerations during the development and management of the information system may include the following:

- Establishing police information requirements (e.g., biometrics).
- Establishing police statistical requirements.
- Establishing a police information collection plan.
- Gathering information directed from the collection plan.
- Establishing a database and training operators.
- Establishing supporting documents.
- Conducting analysis of the information to determine police intelligence value.
- Training HN military and civilian police personnel to manipulate the information system for maximum efficiency and benefit.

The establishment of the automated information system is an extremely important part of setting up a modern policing capability and should also accommodate the development of a centralized data storage capability that is accessible to all police and security agencies. When designing and implementing these automated information systems, the following must be considered:

- Incorporating a security program into the system. The system must be secure and not accessible to unauthorized users.
- Developing an information management system that will provide support—combining administration, logistics, training, operation reporting, vehicle registration, police reporting, and penal information.
- Determining additional law enforcement reports needed, such as daily activity logs and other automated entries.

- Providing law enforcement access to automated police records from a centralized database.
- Conducting queries expeditiously from a centralized database for real-time information and quick compilation of crime statistics.

Note: The development and maintenance of a database is paramount to recording and storing police information. A database promotes easy retrieval and analysis of the data. Initially information management experts may be required to establish and train on the database, providing data for assessment of the HN's capabilities. The end state is to transfer the responsibility of database population, analysis, and maintenance to the HN or international police agency as soon as possible.

Information Gathering. Information must be gathered in accordance with the collection plan. Reporting and documentation procedures must also be developed and trained to accommodate relevant information received by patrols that may not have been driven by the collection plan but may provide indicators of emerging crime. These findings will be documented through review of standard police reports and field interview documentation. As military police and contractors train their HN police counterparts, extensive use of joint collection teams and multinational police operations will aid the training and mentorship of the HN police and accelerate familiarity with information gathering as specified in the collection plan.

All information gathered must be filed and organized to promote easy retrieval and analysis of the data to gain maximum benefit. Ideally, the data will be filed in electronic form within a secure database. At a minimum, the HN or international police should establish the following types of files:

- *Area*. Area files include information on definable geographic areas that have activities of police interest. Such areas include residential and recreational—where the general population might gather and where unfriendly populations congregate (e.g., drug trafficking or other illicit activities; areas controlled by criminals or insurgents to recruit, train or meet; areas that may provide supplies and equipment to irregular threat forces).
- *Activity*. Activity files contain all information of interest to the HN or international police. These files capture information regarding people, activities, functions, and properties. Military police and contractors cannot necessarily apply the laws of the United States to these files, but may use them as a guide in establishing the database for or with the HN or international police. The HN or international police will need to make the legal determinations when they assume responsibility of the files. Such categories of these files may include participants in demonstrations or individuals involved in other criminal activity.
- *Individual*. The HN or international police may develop dossiers on any person considered significant. Individuals are identified as significant because of their involvement in activities, leadership, contacts, or type of symbols displayed that reflect religious, economic, social, or political affiliations. Once they are in place, the authorizations and legalities of these files will be determined by the HN or international authorities.
- *Investigative*. Investigative files are compiled by police on individuals who are suspected of a crime. Military police and contractors should mentor the HN or international police concerning how to capture information (e.g., forms) that may be used in MP investigations. This will assure that critical information is captured concerning a crime or incident.

Once the database has been established and populated, the military police and HN forces will

establish the types of administrative documentation (e.g., reports) needed and the format that will provide maximum benefit to the users for criminal analysis purposes.

Criminal Analysis. The purpose of conducting analysis of police information is to determine its police intelligence value. This information is valuable to US forces, the HN, and the international community. For US forces, it assists commands in protection efforts, mission assurance support areas, base defense, antiterrorism efforts, crime prevention measures, counterterrorism, investigations, and prosecutions. A viable criminal analysis capability allows the HN to identify criminals, criminal activities and groups, locations of crime and activity, and correlations between categories of criminal activity and enables predictive analysis. It is critical to establishing and maintaining a mature and viable police and investigative organization that can be effective in enforcing laws and investigating criminal activity.

Police Station: Highway Patrol

The mission of the highway patrol is to provide law enforcement and security along highways and major roadways, ensuring the safety of all citizens, international visitors, and the free flow of national and international commerce. Military police should assist in the development of the HN highway patrol's capabilities. A part of this development includes designing mutually-supportive jurisdictional boundaries, which will cross other national police jurisdictions. By the nature of the mission, the highway patrol becomes a key conduit of police information across local police boundaries. The development of a highway patrol will also assist in US and multinational force freedom-of-movement. Highway patrol officers should attend the basic police training academy and receive specialized training focused on their unique mission. Key tasks for the highway patrol may include the following:

- Providing deterrence and interdiction of terrorists, weapons, and supplies through active patrolling of highways.
- Searching, locating, securing, reporting, and coordinating the timely discovery of explosive devices.
- Responding rapidly to incidents and accidents along highways and major roadways.
- Providing emergency first aid.
- Coordinating evacuation of injured persons and aiding disabled motorists.
- Investigating criminal and traffic complaints and violations along highways and major roadways.

To aid the HN patrol in the accomplishment of these key tasks, a comprehensive registry should be developed to track vehicles and their registered keepers. Military police should assist the HN police in developing policies, procedures, and model programs that encourage the effective and efficient administration of jurisdictional driver licensing and control requirements. Considerations include the following:

- Facilitating the exchange of ideas and information on issues concerning licensing and control, law enforcement, education, research, and judicial and governmental communities.
- Promoting liaison with other safety-related organizations.
- Facilitating the establishment of vehicle licensing and registration as a means of deterring criminals from disguising stolen cars with the identity of others.
- Safeguarding personal information to prevent personal data from being accessed by unauthorized persons. The issue of identification reliability, integrity, and confidentiality is critical and must be of prime concern to all citizens and law enforcement officials.

CHAPTER 5
MILITARY WORKING DOG OPERATIONS

The MWD teams are employed in dynamic ways that continue to evolve into a highly trained asset that commanders continue to use around the world. These specialized teams aid commanders in conducting stability and warfighting operations. Being modular and mobile makes these teams very agile, enabling them to deploy rapidly and allowing them to quickly integrate into operations. The MWD program effectively integrates expertly trained MWD handlers and highly intelligent breeds of dogs that maintain a high tempo of operations in their support of joint operations, multi-echelon tasks, and interagency missions. As technology and world security situations evolve, the MWD team will continue to adapt in order to provide commanders the unique capabilities required to be combat multipliers on the battlefield and support mission assurance efforts.

The Marine Corps MWD program provides varying MWD capabilities that are matched to the mission or task by the supported commander. Although all MWDs are different, their detection and warning capabilities are a combined result of the MWD's superior senses of sight, sound, and smell. The MWDs can be a force multiplier when properly employed in military operations on urbanized terrain with the infantry and other Marines. Failure to match the MWD capabilities to the mission creates a wasted resource and increases the potential for failure.

Mission

The MWD teams provide commanders with a force multiplier in the following areas:

- Explosives detection.
- Drug detection.
- Intruder detection.
- Human tracking.
- Patrolling.
- Nonlethal apprehension of combatants.
- A psychological deterrent.

Organization

The MWD platoon is organized under the MP support company in each MEF. The platoon commander or sergeant, kennel master, assistant kennel master, training SNCOIC, and chief MWD trainer provide leadership for the MWD platoon. The MWD platoon is broken down into three squads containing all of the MWD disciplines. These squads provide scalable elements to support the MAGTF. Each squad has an assigned SNCOIC squad leader or trainer and a subject matter expert trainer for each MWD discipline. Each of these disciplines is unique and requires extensive training in the development of and maintenance of team proficiency. Because of these unique disciplines, and the extensive training requirements of the MWD, it is important that command relationships for forward deployed elements of the MWD platoon are identified prior to deployment. The MWDs may also be task-organized into detachments of varying sizes and compositions to support other MAGTFs (e.g., SPMAGTFs, MEUs). In these cases, MWDs should be requested by the MAGTF commander from the MEF, after analysis of the unit's mission.

The MWD platoons provide the MAGTF commander with mission capable MWD teams. These MWD teams, composed of a Marine and an MWD, are trained as a cohesive element that may be attached to a ground combat element, logistics combat element, or aviation combat element—as an individual team or as part of a larger element as dictated by the mission.

Capabilities

The MWD's heightened senses of sight, smell, and hearing, coupled with obedience and patrol training by a certified dog handler, provides a significant detection capability, as well as a physical and psychological deterrent. In addition, the MWD provides a psychological advantage to the unit and significantly enhances the commander's ability to protect forces and assets. On- and off-leash, MWDs provide the commander an added deterrence factor and the ability to address and potentially neutralize the threat from IEDs. The MWDs also enhance the MAGTF's ability to locate weapons and explosives caches and conduct other appropriate missions. Depending upon the MWD's type of training, they can also detect and locate a person or explosives faster than a human can, even when obstacles, distance, or terrain might obscure the threat from human detection.

Public knowledge of MWD team detection capabilities provides commanders with a formidable deterrent wherever the MWD team is employed. The MWDs are trained for detecting drugs and explosives, tracking, scouting, patrolling, and performing building and area searches. Like other highly specialized equipment, MWDs enable commanders to perform their mission more effectively with a significant savings of manpower, time, and money.

Employing MWDs with different capabilities (see table 5-1) to work together may prove very effective. For example, during route clearance, units can use specialized search dogs (SSDs) to sweep the roads and find caches and combat tracker dogs (CTDs) to follow the tracks of possible insurgents that were initiated from the site of an SSD find. When MWDs are collocated and working as a single unit their effectiveness is improved

Table 5-1. Military Working Dog Program Capabilities

		Assignment by Type of MWD			
Operational Task	MWD Functions	P/DDD	P/EDD	SSD	CTD
Main or alternate supply route	Explosive detection and tracking		X	X	X
Inspection	Explosive and drug detection	X	X		
Entry control point	Explosive, drug detection, and patrol	X	X	X	
Quick search	Explosive detection		X	X	
Vehicle control point	Explosive and drug detection	X	X	X	
Cordon and knock	Explosive detection, tracking, and patrol	X	X	X	
Raid	Explosive detection, tracking, and patrol	X	X	X	X
High value target	Explosive, drug detection, patrol, tracking	X	X	X	X
Search and rescue	Tracking				X
Perimeter security	Patrol	X	X		X
Crowd control	Patrol	X	X		

Types of Military Working Dogs

Patrol Dog

Patrol dogs (PDs) can be used as tactical enhancements to support combat operations. The PD in the Marine Corps is normally dual-certified as either an explosive detector dog (EDD) or drug detector dog (DDD). These types of MWDs are referred to as patrol/explosive detector dog (P/EDD) and patrol/drug detector dog (P/DDD). The PD teams enable the commander to employ less Marines and apply their resources to other areas. This force multiplier is especially valuable in area security, force protection, and antiterrorism operations. One benefit of MWD employment is the deterrence of criminal activity and/or infiltration. The obvious presence and well-published activities of MWD teams can successfully deter trespassers, vandals, violent persons, infiltrators, and other would-be criminals. When the desired task is to deter unauthorized or suspicious individuals, an MWD team should be assigned to that location both day and night. The PD's contribution is most effective when the MWD team is utilized as a walking patrol. As a walking patrol, the PD team can check or clear buildings, perimeters, and open areas. Mobility significantly increases the potential area of coverage. In addition, PD teams can and should be utilized as a tool for area defense and providing warning and response. The PDs are trained to apprehend suspects at or near a crime scene, stop those who may attempt to escape, and protect their handlers from harm. Some PDs may also be utilized for the following:

- Supporting antiterrorism operations.
- Supporting force protection and antiterrorism efforts.
- Assisting in military police investigations.
- Walking and mobile patrols.
- Checking and searching building.
- Identifying and apprehending individuals.
- Locating suspects who have left the scene of a crime.
- Protecting high-risk personnel.
- Performing area searches.
- Supporting the control of civil disturbances.
- Assisting in perimeter security.
- Detecting external intrusion.
- Assisting the response force.
- Supporting entry control points (ECPs).
- Supporting high-risk targets.
- Patrolling vulnerable areas.
- Performing combat patrols.
- Manning observation posts and listening posts.
- Supporting EPW operations.

Drug Detector Dog

The DDD provides commanders with unique capabilities in combat support environments. The DDDs in the Marine Corps are normally dual-certified with the capability of a PD and is referred to as a P/DDD. These dual-certified MWD teams should perform normal patrol duties when not required for specific detection work because they can quickly lose their patrol proficiency if they are not assigned to perform their full range of capabilities. Commanders have a very effective means of detecting the possession and/or use of controlled substances with the employment of a DDD team. The drug detection capabilities of the DDDs can be used to maintain the order and discipline of US forces as well as combatants and other persons involved in operations (e.g., EPWs, DCs, CIs, refugees, other detained/interred persons during time of war or conflict). Commanders should request drug detector support when drug use or exposure to illicit drugs are anticipated or suspected in the following environments:

- Contingency and combat operations.
- Low intensity conflicts.
- Extended deployments.
- Whenever Marines come in regular contact with civilians.

The DDD is trained to detect the odor and location of the source of illicit drugs and drug-associated paraphernalia. In order to maximize the accuracy of the DDD's response, the DDD will not be trained to detect explosives. The DDDs are trained to recognize the scent of certain illegal substances through a program of practice and reward. When the DDD responds on any of the substances the DDD is trained to detect, the MWD handler will provide an appropriate reward. The DDDs are not employed to search people. The DDD teams can be utilized for the following:

- Investigations.
- Health and welfare inspections.
- Barrack searches.
- Workplace searches.
- Random gate inspections.
- Area searches.
- Vehicle searches.
- Postal support.
- Aircraft and luggage searches.
- US customs searches.
- Predeployment and redeployment searches.

Explosive Detector Dog

The EDD is trained to detect the odor and location of the source of an explosive. In the Marine Corps, EDDs are normally dual-certified with the capability of a PD. This type of MWD is referred to as a P/EDD. In order to maximize the accuracy of the EDD's response, the EDD will not be trained to detect drugs. These dual-certified MWD teams should perform normal patrol duties when not required for specific detection work because they can quickly lose their patrol proficiency if they are not assigned to perform their full range of capabilities. The EDD teams are critical when conducting searches or performing investigations involving explosives to ensure personnel and facilities are safe and protected from would-be terrorists. The EDD teams are particularly useful if there is a requirement to locate one or more explosive item(s) that may have been hidden in an area. The EDDs should not be used once a suspicious item has been identified or to confirm suspicious items. If there is reason to believe an item contains explosives, explosive ordnance disposal should be employed. The deterrent value and the detection capabilities of EDD teams are a very effective countermeasure to terrorism. Public knowledge that EDD teams are in use is a deterrent to persons who may try to use explosives illegally. The knowledge that explosives can be detected by EDD teams at entry points or in places where explosives have been hidden can prevent a person from attempting to commit a terrorist act. An EDD team can conduct a significantly more effective search of an area or facility in a much shorter time than a large number of personnel can. Using EDD teams reduces the potential risks associated with explosive searches, while enhancing detection results. The EDDs are not to be used to search people. The EDD teams can be utilized for the following:

- Bomb threat incidents.
- ECP searches.
- Checkpoint searches.
- Random gate searches.
- Investigations.
- Health and welfare inspections.
- Building and area searches.
- Vehicle searches.
- Postal support.
- Aircraft and luggage searches.
- Predeployment and redeployment searches.
- Protective services missions.

Specialized Search Dog

The SSDs are trained off-leash to detect the odor and presence of specific explosives. This specialized ability makes the SSD a valuable tool to help commanders maintain law and order while enhancing safety procedures. The SSD can be employed as an antiterrorism and force protection asset or in combat operations worldwide. The SSDs are single-purpose MWDs that detect IEDs, explosive components, and weapon caches on- and off-leash, up to 100 plus meters from the

MWD handler. The SSDs may be utilized to search on-leash, but this is not the preferred method. The SSDs are capable of searching vehicles, buildings, roadways, and open areas. They are primarily used in support of the operating force but may be employed in-garrison as an EDD. The SSDs provide the commander a viable asset in detecting IEDs, explosives and explosive components, and weapons caches off-leash. The SSDs may be directed (i.e., controlled) through the search pattern by voice command, hand and arm signals, a combination of both, or voice command via radio. The SSDs should not be used to search people but may be utilized for the following:

- Bomb threat incidents.
- Checkpoint searches.
- Investigations.
- Health and welfare inspections.
- Building and area searches.
- Postal support.
- Aircraft and luggage searches.
- Predeployment and redeployment searches.
- Protective services missions.
- ECP searches. (This is not a preferred use because the EDD is better suited to this task and it eliminates specialization of SSD.)
- Random gate searches. (This is not a preferred use because the EDD is better suited to this task and it eliminates specialization of SSD.)

Combat Tracker Dog

The CTDs are a single purpose MWD: they provide the commander with the capability of tracking. When supporting the operating force, the CTD can re-establish contact with ECs, relocate friendly personnel, or conduct reconnaissance of an area. The CTDs are capable of working in both urban and rural environments, day or night. If a CTD is required to work at night, night vision should be provided to the handler, enabling him to read the dog's alerts. The CTD will track humans (i.e., groups and specific individuals) and may alert on a human presence (i.e., strongest scent and specific scent). The CTD will close on the quarry using the strongest scent—groundborne, windborne, or waterborne. A CTD can track in or over vegetation, routes, sand, water, concrete, and asphalt. To conduct a successful track, a CTD needs an adequate starting point that is not contaminated with extraneous humans. Because of the nature of casting and conducting a track when employed in a combat zone, the CTD team requires dedicated security and cover as the handler is focused entirely on controlling the animal. The CTDs are capable of tracking the following:

- Enemy personnel:
  - Makers of IEDs and explosives.
  - Planters of IEDs and explosives.
  - Handlers of IED and explosives.
  - Enemy personnel from points of origin.
  - Snipers (including while hidden).
  - Fleeing enemy personnel (maintaining contact).
- Friendly personnel:
  - Who are lost.
  - Missing in action.
  - Taken as a prisoner.

Supported Unit Questions for the MWD Handler

The MWDs' capabilities will vary from team to team, depending upon experience, training, and the dog-handler relationship. To enhance the employment of MWD teams, supported units should answer the following questions in order to understand the MWD team's capability:

- What is the MWD's endurance level—how long will he be able to work?
- What odors are the MWD trained to detect?
- What types of missions has the MWD previously performed?
- How well does the MWD work off-leash?
- Is the MWD aggressive toward Marines?
- Is the MWD aggressive toward civilians?
- How well does the MWD travel in vehicles?
- Has the MWD ever been transported via helicopter?

- How well does the MWD work at night?
- What is the MWD's maximum effective off-leash distance?
- What action does the MWD take upon finding a suspected target?
- What is the MWD's medical condition?
- How much water and food does the MWD consume daily?
- What is the MWD's reaction to gunfire?
- How is the MWD rewarded?
- How will the MWD react if his handler is wounded or killed, and what actions should be taken if this does occur?
- How is the MWD team-certified?
- How experienced is the handler?
- How can the MWD team be integrated with a fire team, squad, or platoon?
- What are the required and/or recommended work and rest cycles in order to maintain the MWD's effectiveness?
- What is required if a MWD bites someone?

Planning Considerations

When MWD teams are employed they participate in all phases of the unit's mission; therefore. it is essential that the kennel master, handler, MP staff officer or SNCO, MP support company commander, or PM participate in mission planning. The handler and the kennel master may also recommend ways to use the MWD team. In addition to the commander's concept and mission, enemy, terrain and weather, troops and support available-time available, the handler must consider the following:

- Length of tactical employment.
- Climate and environment.
- Location and size of area to be covered.
- Condition and type of terrain.
- Prevailing wind direction.

Combat operations require the handler's full attention to maintain focus on working and controlling their MWDs. This severely reduces the handler's ability to employ his weapon rapidly and effectively if enemy contact occurs; therefore, the MWD team operates within the "buddy system" concept used on all Marine Corps combat operations. Because the handler is almost totally focused on his dog, it is in the best interests of all concerned to assign a two-man buddy team to the handler so they can maintain the mutual support and all-encompassing security necessary in a combat, contingency, or military operations on urbanized terrain environment.

WARNING

Units employing MWDs must establish procedures for use of weapons to ensure MWDs are not accidentally shot and to protect them from indigenous personnel and animals.

Usually MWD teams work in front of or on the flanks of other personnel or the protected facility, but not so far that the accompanying Marines cannot provide security for the team. The team should be downwind from potential locations or avenues of approach of the person(s) and/or explosive(s) to be detected. This improves the chances of providing early warning. If the MWD team is supporting a patrol that is moving directly into the wind, the team may have to move left or right of a line-of-march to take advantage of the prevailing wind. If the situation or terrain dictates, the MWD team can traverse while the supported unit continues on a direct route.

The MWD handlers must socialize the dog into the supported unit immediately. The handler is responsible for training the dog to be tolerant and obedient, regardless of the environment. Familiarity with members of the unit will reduce aggression toward unit personnel. In order to maintain discipline of the MWD, supported unit personnel must strictly adhere to the following:

- Do not feed the MWD. Only the handler is authorized to feed the MWD.
- Do not play with or pet the MWD, except under the handler's direct supervision.

- Do not make any move or gesture that an MWD may interpret as a threat to his handler.
- Do not think of the MWD as a pet or mascot.

The MWD team should rehearse with the supported unit prior to a mission so that everyone can become accustomed to working with the MWD. Supported unit personnel must know what to do if a handler is seriously wounded or killed. A MWD that has worked closely with a supported unit and developed a tolerance for one or more of the individuals will usually allow one of them to return it to the kennel. If the MWD will not allow anyone near its handler, other handlers must be called in to assist.

Normally handlers are armed with a sidearm and may carry a weapon with a sling. These weapons are primarily for the defense of the handler and the MWD. The handler focuses on working and controlling the MWD. The recommended weapon for a MWD handler is the M-4 because the shorter length of the weapon provides the handler more flexibility and movement while working the MWD during an operation. The shorter barrel of the M-4 also prevents the MWD from being struck in the head during operations.

Both training and health present unique planning considerations. Training must be considered while conducting field training and during deployments. Training aids, such as explosives and/or narcotics, are required to maintain MWD team proficiency. Finding and employing a site to effectively train, kennel, and provide medical treatment must also be taken into consideration. While an MWD team may be employed in various austere environments, it is essential to provide veterinary support if the care required is beyond the capabilities of the handler.

Transportation

The MWD team can be transported by ground, air, or water. In both combat and garrison, the allocation of transportation assets is essential to allow for effective employment, training, and care. During training, the ability to transport MWD to training sites, as well as to veterinary facilities, must be planned for and adequately sourced. During tactical missions when the MWD is not being employed, the preferred method of kenneling is to keep the MWD in a kennel crate if possible and supportable; however, it is understood there will be times when this will not be possible or supportable. The kennel crate can be taken apart, but the load plan must take into account that the MWD team requires additional space in the transportation vehicle. Advantages and disadvantages of transporting the MWD in the kennel crate include the following:

- Advantages:
  - MWD handler can man a weapon if necessary.
  - Better for the MWD's rest management.
  - Safety of friendly forces is enhanced (e.g., eliminates the potential for the MWD biting a Marine).
- Disadvantages:
  - Logistical footprint (i.e., ability to be transported in the field).
  - The MWD may be isolated from the supported unit, limiting camaraderie and cohesion.

The MWD can be transported by a variety of means, ranging from tactical aircraft to armored vehicles. However, in each case, the safety of both the MWD and the vehicle crew must be considered. For example, in an M1114 up-armored HMMWV [high-mobility multipurpose wheeled vehicle], the placement of the MWD may interfere with the operation of the turret gunner, especially if the kennel crate is employed. The MRAP [mine-resistant ambush-protected] armored vehicles also provide unique challenges because of the layout of seating and the elevation of the crew compartment. A medium tactical vehicle replacement should be used for transport only as a last resort because of the extreme height of the troop compartment and the lack of environmental controls. The MWD can safely travel in all types of assault support aircraft. Consideration should be made to allow handlers to control the MWD

effectively without interfering with aircrew operations. In some cases, the MWD may require being transported on aircraft without the advantage of the kennel crate. It is essential that the aircrew and other passengers are briefed concerning the safety considerations involving the MWD.

When MWDs are transported by ships or are embarked for amphibious operations, the MWDs should be kenneled in their kennel crate. A designated area should be established so that personnel other than MWD handlers do not have access to the MWDs. When possible and feasible, the preferred method would be for the MWD teams to fly and meet the unit at a deployed location.

Veterinary Support

The US Army Surgeon General provides professional veterinary support for the entire MWD program through the Army Veterinary Corps. This responsibility includes the following:

- Providing medical and surgical care.
- Conducting inspections to ensure that MWD kennel facilities are safe and sanitary.
- Prescribing an adequate feeding program for MWDs.
- Instructing handlers and supervisors in all matters related to the health of MWDs, including first aid for MWDs.
- Conducting research to improve the DOD MWD program.

The responsible veterinary corps officer (VCO) provides treatment for the diseased or injured MWD at the kennel facility or at the installation veterinary treatment facility. The US Army Veterinary Corps is responsible for equipping the veterinary treatment facility and providing medical and surgical supplies. The VCO is responsible for the MWD veterinary treatment record and related information about examinations, immunizations, and treatment. The VCO instructs MWD handlers about dog health, care, feeding, and first aid. This instruction helps the MWD handler to develop a better understanding of the MWD’s health needs and improves the MWD handler's ability to care for the MWD. The VCO prescribes an appropriate feeding program based upon the MWD's health, the climate, and working conditions. The VCO is involved in the review of all plans for new MWD kennel facility construction or modifications. This ensures that potential health and safety hazards can be corrected before construction begins.

In the combat environment, the PM or kennel master must coordinate with the responsible VCO to ensure proper support. Additionally, MWDs must be routinely evaluated prior to and after employment, like any other Marine. In some theaters, the use of prophylactic medications is required for preventative medicine purposes. The effective coordination and planning with the VCO is required to maintain both combat effectiveness and readiness.

Medical Concerns

The MWD handler is trained to know how and when to use items deployed in the first aid kit. For example, he can assist with intravenous fluids, sutures, medications, and splints with the help of a corpsman. The most common medical concerns for MWDs are overheating, diarrhea, cuts, abrasions, and eye irritations. A wounded or sick MWD may be evacuated by air if necessary.

Environment

Some environmental situations severely restrict or prohibit the use of MWDs. Before employing MWDs, the following factors should be considered:

- MWD employment near petroleum, oils, and lubricants must be limited. These elements can damage a MWD’s paws and affect his sense of smell.

- MWDs are prohibited from areas contaminated with chemical, biological, radiological, and nuclear (CBRN) agents because there are no protective devices for them.
- MWDs may work in open areas where riot control agents are in use if the wind velocity is normal; however, they should be closely monitored and taken to a veterinarian if they show signs of distress.

Other environmental concerns may also impact the use of the MWD. In some theaters, the presence of disease carrying vectors, feral animals, and other circumstances (e.g., heat, humidity, amount of water, type of soil) may pose risks to MWD that may hinder effective employment.

Field Kennels

An MWD field kennel may be constructed out of any available resources. The design is not standard and varies from site to site, depending upon the location, mission, and duration of operations. Using a concept similar to constructing fighting positions, the MWD field kennel will be improved as needed or until a permanent MWD kennel facility is completed. Using tents and shipping crates may be a hasty method of setting up an MWD field kennel. Although this method is not optimal for sustained operations, it may be useful until other accommodations can be coordinated. Kenneling of MWDs and billeting of Marines, excluding handlers, should be separate. The tents should be erected at a location that allows the MWDs a safe place to rest away from other troop activities after operations. Whenever possible, terrain or buildings should be used as a barrier between troop activity and the MWD field kennel. Never place the MWD field kennel near motor pools, dining facilities, or high noise areas. In some areas of operation, it may be possible to obtain the use of a building or other structure for temporary kenneling. In these cases, the building must be well-ventilated, free of hazards (e.g., chemicals, bare wires, holes, debris) and structurally sound. Engineers are often used to assist in the improvement of a MWD field kennel. In addition, fencing should be erected and dog runs created. Procedures for using a shipping crate (e.g., Vari Kennel, kennel crate) as temporary kenneling of a MWD are detailed as follows:

- The interior, exterior, and ground beneath the shipping crate must be cleaned daily to prevent the accumulation of moisture, waste, or insect infestation.
- The shipping crate must be raised 4 to 6 inches off the ground to allow for adequate drainage and to reduce parasite-breeding environments.
- In hot climates, place the shipping crate under trees with a tarpaulin or plywood to provide shade and ventilation. Adequate shade and cover must be provided for the MWD. Kennel areas should be cleared of all objects that can injure the MWD.
- Spread gravel, if available, around and under the shipping crate to allow for drainage and the easy removal of solid waste.

CHAPTER 6
LIMITED DETAINEE OPERATIONS

United States forces must recognize that the ability to determine detainee intent will be increasingly more complex in the future. It may be difficult to determine the identity of the enemy. Civilians may lose their protective status by taking an active and direct part in hostilities. Detainees, current and future, understand how their behavior can influence decisions up to and including the national level, which may divert the efforts of the military detention operations.

Detainee operations are conducted to enhance MAGTF effectiveness when faced with large prisoner and detainee control responsibilities. Through the use of collection points and holding areas, military police provide the commander with the ability to collect, process, guard, protect, account for, and transfer EPWs and CIs. Military police enhance the tempo of operations by effecting the quick control and evacuation of prisoners from the forward battle area to temporary holding areas and, in joint operations, to US Army EPW and CI holding facilities. In addition, military police aid in the movement of forces by clearing the AO of EPWs and CIs.

For additional information concerning detainee operations, see MCO 3461.1, *Enemy Prisoners of War, Retained Personnel, Civilian Internees, and Other Detainees*, and MCWP 5-12.1, *The Commander's Handbook on the Law of Naval Operations.*

The *Geneva Conventions*

Detainee operations are governed by the provisions of the *Geneva Conventions*, which were ratified by the United States and came into force for the United States on 2 February 1956. Comprised of four treaties, the *Geneva Conventions* provide internationally recognized humanitarian standards for the treatment of victims of war. It is DOD policy to comply with the law of war during all armed conflicts. Therefore, the United States is obligated to adhere to the *Geneva Conventions* and the law of war during all armed conflicts. However, such conflicts are characterized, and present in all other military operations regarding the treatment of EPWs, CIs, and detained persons.

Geneva Convention (I) for the Amelioration of the Condition of the Wounded and Sick in Armed Forces in the Field

This Convention provides for the protection of members of armed forces and other persons who are wounded and sick on the battlefield. It provides for members of the conflict to take all possible measures to—

- Search for and collect the wounded and sick.
- Protect them against pillage and ill treatment.
- Ensure their adequate care.
- Search for the dead and prevent their being despoiled.

Geneva Convention (II) for the Amelioration of the Condition of the Wounded, Sick, and Shipwrecked Members of Armed Forces at Sea

This Convention deals with the humane treatment and protection by the parties to a conflict that involve armed forces members and other persons at sea who are wounded, sick, or shipwrecked and the protection of hospital ships and burial at sea.

Geneva Convention (III) Relative to the Treatment of Prisoners of War

The governing motive of this Convention is to provide for the humane treatment of EPWs by the

parties involved in a conflict. It regulates, in detail, the treatment of EPWs, including the following:

- Care, food, clothing, and housing.
- Discipline and punishment.
- Labor and pay.
- External relations.
- Representation.
- International exchange of information.
- Termination of captivity.

Geneva Convention (IV) Relative to the Protection of Civilian Persons in Time of War

This Convention deals with the general protection of populations against the consequences of war, the status and treatment of protected persons, and the treatment of CIs.

Protection Provisions of the *Geneva Convention*

The provisions of the *Geneva Convention* provide the EPWs and CIs with the applicable and entitled protections from their time of capture until release or repatriation.

The EPW or CI must receive humane treatment without distinction founded on race, sex, nationality, religious belief, political opinions, or other similar criteria. The EPWs or CIs may not be murdered, mutilated, tortured, and degraded. Individuals and capturing nations are responsible for acts committed against EPWs and CI that are in violation of the *Geneva Convention*.

The EPWs and CIs are entitled to respect and honor as human beings. They are to be protected against acts of violence, insults, public curiosity, and reprisals. They are not to be subjected to physical mutilation or to medical or scientific experimentation, only normal medical, dental, or hospital treatment.

No form of coercion may be inflicted upon EPWs and CIs to obtain information. Those who refuse to answer may not be threatened, insulted, or exposed to unpleasant or disadvantageous treatment. Female EPWs and CIs are to receive treatment at least as favorable as that accorded to male EPWs and CIs.

United States Governing Policy of the *Geneva Convention*

In accordance with the *Geneva Convention*, US policy directs that EPWs and other enemy personnel captured, interned, detained, or held in custody during the course of a conflict shall be afforded humanitarian care and treatment from the moment of custody until final release or repatriation. The observance of this policy is binding on US personnel.

This policy also applies to the protection of detained or interned personnel whether their status is that of prisoner of war, CIs, or a criminal suspected of a war crime. The punishment of criminals is administered by due process of law and under legally constituted authority. The administration of inhumane treatment, even if committed under stress of combat and with deep provocation, is a serious and punishable violation under national law, international law, and the UCMJ.

Personnel Categories

Detainees

The term detainee means any person captured, detained, held, or otherwise under the control of DOD personnel (military, civilian, or contractor). Detainees may also include ECs (lawful [i.e., EPWs] and unlawful), RPs, and CIs (see DODD 2310.01E). It does not include personnel being held for law enforcement purposes, except where the United States is the occupying power.

Enemy Combatants

An EC is a person engaged in hostilities against the United States or its coalition partners during

an armed conflict. The term EC includes both lawful ECs and unlawful ECs.

Lawful ECs, who are entitled to protections under the *Geneva Convention*, include members of the regular armed forces of a state party to the conflict; militia, volunteer corps, and organized resistance movements belonging to a state party to the conflict, which are under responsible command, wear a fixed distinctive sign recognizable at a distance, carry their arms openly, and abide by the laws of war; and members of regular armed forces who profess allegiance to a government or an authority not recognized by the detaining power.

Lawful ECs are EPWs upon capture, and they are entitled to combatant immunity for their lawful precapture warlike acts. They may be prosecuted, however, for violations of the law of war. If so prosecuted, they still retain their status as EPWs.

Unlawful ECs are persons not entitled to combatant immunity, who engage in or support acts against the United States or its coalition partners in violation of the laws and customs of war during an armed conflict. For purposes of the war on terrorism, the term unlawful EC is defined to include, but is not limited to, an individual who is or was part of or supporting Taliban or al Qaeda forces or associated forces that are engaged in hostilities against the United States or its coalition partners.

Enemy Prisoners of War

Captured enemy personnel may be presumed to be EPWs immediately upon capture if they are armed and uniformed. See MCO 3461.1 for more information. Captured personnel must receive the same treatment to which EPWs are entitled until competent military authority has determined that their status is otherwise. The *Geneva Convention* defines EPWs as the following:

- Members of the enemy armed forces, as well as members of militias or volunteer corps forming part of such armed forces.
- Members of other militias and members of other volunteer corps, including those of organized resistance movements, belonging to an enemy power and operating in or outside their own territory, even if this territory is occupied, provided that such militias or volunteer corps, including such organized resistance movements, fulfill the following conditions:
  - That of being commanded by a person responsible for his subordinates.
  - That of having a fixed distinctive sign recognizable at a distance.
  - That of carrying arms openly.
  - That of conducting their operations in accordance with the laws and customs of war.
- Members of enemy regular armed forces who profess allegiance to a government or an authority not recognized by the detaining power.
- Persons who accompany the armed forces of the enemy without actually being members thereof, such as civilian members of military aircraft crews, war correspondents, supply contractors, members of labor units, or of services responsible for the welfare of the enemy armed forces, provided that they have received authorization from the armed forces which they are accompanying.
- Members of crews, including masters, pilots, and apprentices, of the merchant marine and the crews of civil aircraft of the enemy power, who do not benefit by more favorable treatment under any other provisions of international law.
- Inhabitants of nonoccupied territory, who, on the approach of US forces, spontaneously take up arms to resist the invading forces, without having had time to form themselves into regular armed units, provided they carry arms openly and respect the laws and customs of war.
- Persons belonging, or having belonged, to the armed forces of a country occupied by US forces, if the commander considers it necessary by reason of such allegiance to intern them, even though they may have been originally liberated from EPW status while hostilities were going on outside the occupied territory.

Civilian Internees

A CI is a civilian who is interned during an armed conflict, occupation, or other military operation for security reasons, for protection, or because he has committed an offense against the detaining power. Such individuals, unless they have committed acts for which they are considered unlawful combatants, generally qualify for protected status in accordance with the *Geneva Convention*, which also establishes procedures that must be observed when depriving such civilians of their liberty. The CIs are to be accommodated separately from EPWs and persons deprived of liberty for any other reason.

Retained Person

An RP is a special category for medical personnel and chaplains because of their special skills and training. Although they are not EPWs, they may be retained by the detaining power to aid EPWs, preferably those of the armed force to which the RP belongs. Per the *Geneva Convention*, RPs will receive the same benefits and protection as EPWs. An RP is a person who falls within one of the following categories:

- A person who is a member of the medical service of an enemy armed force.
- A medical person of an enemy force exclusively engaged in—
  - Searching, collecting, transporting, or treating wounded or sick personnel.
  - Preventing disease.
  - Administering a medical unit or establishment.
- A chaplain attached to an enemy armed force.
- A member of the International Federation of Red Cross and Red Crescent Societies or another voluntary aid organization. The organization must be duly recognized and authorized by its government. The staff may be employed in the same duties as medical personnel if the organization is subject to military laws and regulations.

The following privileges and considerations are extended to RPs because of their professions:

- Correspondence privileges that are over and above those afforded to EPWs.
- Facilities to provide medical care, spiritual assistance, and welfare services to EPWs.
- Transportation for periodic visits to EPW branch internment or resettlement facilities and hospitals outside the EPW internment or resettlement facility to carry out medical, spiritual, and welfare duties.
- Work assignments that are restricted to medical and religious duties that they are qualified to perform.
- Quarters that are separate from EPW quarters, when practicable.

United States Military Confinees

Military police have a continuing mission to detain, sustain, protect, and evacuate US military confinees. In CONUS, corrections specialists are the primary performers of this mission.

During contingency operations, a corrections detachment is the ideal organization to perform US military prisoner internment operations. The US Army is the executive agent for US military prisoners. These confinees must be segregated from the EPWs and CIs and evacuated as rapidly as possible to a US Army facility.

During a deployment or contingency operation, when possible, Marines awaiting trial remain with their respective units unless they are a hazard to the mission, themselves, or others. In these cases, they are detained in pretrial confinement under MP control. These confinees are moved to confinement facilities outside the combat zone when possible.

Dislocated Civilians

A DC is a civilian who left his homes for various reasons. His movements and physical presence can hinder military operations and he most likely

requires some degree of aid (e.g., medicine, food, shelter, clothing). A DC may not be native to the area or to the country where he is residing. Dislocated civilian is a generic term that is further subdivided into the following categories:

- *Displaced person.* A displaced person has been dislocated because of war, a natural disaster, or political or economic turmoil. Consequently, the motivation for civilians to flee and establish status under international and domestic laws may vary, as does the degree of assistance required, and the location for relief operations.
- *Refugee.* The *United Nations Convention Relating to the Status of Refugees* states that a refugee is a person who "owing to a well-founded fear of being persecuted for reasons of race, religion, nationality, membership in a particular social group, or political opinion, is outside the country of his nationality, and is unable to or, owing to such fear, is unwilling to avail himself of the protection of that country."
- *Evacuee.* An evacuee is a civilian who is removed from his place of residence by military direction because of personal security or other requirements of the military situation.
- *Stateless person.* A stateless person is a civilian who has been denationalized, whose country of origin cannot be determined, or who cannot establish his right to the nationality claimed.
- *War victim.* A war victim is a civilian who suffered an injury, a loss of a family member, or damage to or destruction of his home because of war.
- *Migrant.* A migrant is a worker who moves from one region to another—by chance, instinct, or plan.
- *Internally displaced person.* An internally displaced person may have been forced to flee his home for the same reasons as a refugee, but he has not crossed an internationally recognized border.
- *Expellee.* An expellee is a civilian who is outside the boundaries of his country of nationality or ethnic origin and is being forcibly repatriated to that country or a third country for political or other purposes.

Until their status is determined, the DCs are initially processed and handled the same as EPWs and CIs. Civil affairs units, in coordination with HN authorities, work to resettle DCs and refugees. Military police support these efforts by assisting in the collection, evacuation, and resettlement of these persons. During operations, military police ensure that DC and refugee traffic does not adversely affect military maneuver and mobility by redirecting these persons out of harm's way. The DC camps are established in the same manner as EPW and CI facilities. When detainees are contained in a facility for extended periods, dissatisfaction and restlessness may result. Commanders and military police should expect and be prepared for demonstrations, disturbances, or riots. Effective communication and rumor control measures, coupled with professional, humane treatment by security forces, will minimize the possibility and severity of disturbances in the internee population.

Military police conduct straggler control operations to assist commanders in maintaining combat strength by locating and returning stragglers to their units. Military police locate stragglers at TCPs, checkpoints, roadblocks, defiles, or while on patrol. For large numbers of stragglers, special posts and collection points are set up along MSRs or military police can operate straggler posts at established TCPs, checkpoints, and roadblocks.

To expedite movement on MSRs, military police conduct DC control operations. Although the HN usually takes measures to control the movement of their populations during a conflict, a massive flow of civilians can seriously affect the movement or security of military units. If needed, military police redirect or prevent the movement of civilians when their location, direction of movement, or actions hinder military activity. During control operations, military police direct DCs to secondary roadways and areas not being used by military forces.

Detainee Operations

Objectives of Detainee Operations

Under the provisions of the *Geneva Convention*, a capturing power is responsible, from the moment of capture or apprehension, for proper and humane treatment of detainees. The use of biometric systems should be leveraged during all phases of detention operations for optimum organizational purposes. The EPW and CI detainment operations must provide for—

- Implementation of the *Geneva Convention* provisions.
- Humane and efficient care and full accountability for persons captured or detained because of foreign military or related operations.
- Appropriate support of the military objectives of the United States.

Principles of Detainee Operations

To achieve detainee operations objectives, military police employ the following principles:

- Employ humane treatment.
- Support prompt evacuation from the combat zone.
- Provide instruction to troops on the provisions of international agreements and regulations relating to EPWs and CIs.
- Support integration of procedures for EPW and CI evacuation, control, and administration with other combat, combat support, and combat service support operations.

Detainee Functions

Military police, via the PM or MP staff officer, assist the MAGTF commander in the development of plans, policies, and procedures pertaining to EPWs and CIs. During operations, military police focus their efforts on collecting, safeguarding, processing, evacuating, and transferring EPWs and CIs. Specific guidance on legal and capturing unit requirements for EPW handling procedures can be found in MCO 3461.1.

Detention

Although detainees are normally interned by the US Army, in some situations the Marine Corps may be assigned a detention mission. Detainees are selectively assigned to appropriate detention facilities that best meet the needs of the detaining power and the detainee. Some detainees (e.g., ECs) that hold violent opposing ideologies are held in separate facilities in an effort to isolate them from the general population and preempt any unforeseen problems. Once they have been assigned to a facility, they may be further segregated because of nationality, language, or other reasons. Within each facility, detainees are further segregated into the following categories:

- Leaders—both perceived status and positions of authority.
- Hostile elements (e.g., mutually hostile religious, political, ethnic groups).
- Security risks (e.g., agitators, radicals, uncooperative detainees).
- Suspected criminals.
- Civilian from military.
- Military by rank (i.e., officers, noncommissioned officers, enlisted).
- Deserters and those who surrendered from those who resisted capture.
- Minors and females. If possible, keep small children with their mothers.
- Adult males.
- Groups of CIs, RPs, or EC, if known.
- Nationality.
- Other persons (not noted in one of the previous categories).

When segregating detainees by the preceding categories they may be further assigned to separate compounds. Females are always interned in compounds separate from males. Further separation may be necessary, depending upon security issues.

As general policy for the conduct and sustainment of detainee operations at detention facilities, educational, religious, recreational, safety, agricultural, and employment and work programs should be encouraged and supported. These programs will be based upon practicality, operational considerations, and type of detainees held. When possible, adequate facilities, instructional materials, and recreational equipment will be provided for such activities.

Civilian Internee Operations

Military police collect, process, evacuate, safeguard, and, if established, transfer CIs to US Army internment camps. The handling of CIs and EPWs is similar; however, CIs are normally not processed or interned with EPWs. The CI camps provide for separate internment and complete administration of interned civilians. These camps are operated in the same manner as EPW facilities, with regard given to the fundamental differences between the two categories. For example, special consideration is given to the age, physical condition, and the ability of civilians to adjust to detainment conditions. Separate quarters are provided for family groups when the detainment of more than one member of a family is necessary.

The conditions for internment of civilian persons in a CI camp is authorized and directed if such persons satisfy the requirements for CI status and one of the following two conditions applies:

- Internment has been determined by competent authority to be necessary for imperative reasons of security to US forces in the occupied territory.
- Internment has been directed by a properly constituted military court, sitting in the occupied territory, as the sentence for the conviction of an offense in violation of penal provisions properly promulgated by the occupying force.

Detainee Processing

Depending upon the number of EPWs and CIs anticipated, military police are likely to require augmentation. An MP platoon can guard up to 500 captives and a company can guard up to 2,000 during limited, short-term detainee operations at a collection point or temporary holding area. During detainee operations, military police—

- Perform security tasks (e.g., searching, segregating).
- Conduct field processing (e.g., security, medical, evacuation)
- Execute collection control measures (e.g., deliver detainees).

Security Tasks

Military police receive EPWs and CIs from operating forces as far forward as possible. When receiving prisoners, military police perform the security tasks detailed in the following paragraphs.

Receiving and Securing

The detainee is received from the capturing command and secured to prevent escape, or harm to the detainee or capturing unit personnel. Restraint devices are applied to limit detainee movement and prepare for additional processing. Military police treat EPWs and CIs humanely, but firmly, at all times. To maintain control and ensure understanding, military police issue instructions to EPWs and CIs in their native language. These instructions also include a warning of the serious consequences that may result from violations of such instructions. While detained, captives may complain about the food, clothing, living conditions, or their treatment. Displays of conflict must be brought under control quickly and properly and the offenders segregated and isolated. By quickly restoring order using the force continuum, military police can maintain effective control of

EPWs and CIs. Excessive force provides the captives a rallying point for future disturbances and can be the basis for enemy propaganda. To counter disruptions, military police develop and rehearse plans for defusing tense situations, handling unruly captives, and quelling riots.

Searching

The detainee is searched to neutralize him by confiscation of weapons, personal items, and items of potential intelligence or evidentiary value. Military police search each EPW and CI as soon as they are captured or received and whenever custody is transferred. Searching is conducted for the safety of friendly forces and detained persons; to gather information; and to confiscate weapons, documents, and contraband ensuring that procedures for evidence collection and property accountability are strictly followed.

Tagging

Each detainee will be tagged using DD Form 2745, *Enemy Prisoner of War (EPW) Capture Tag*, which provides the only official detainee tracking number prior to receiving an internment serial number (ISN). All confiscated items will be linked to the detainee using the ISN.

Segregating

Military police segregate EPWs and CIs into separate groups of officers, noncommissioned officers, enlisted, civilians, and males and females. Segregation, and the resulting interruption of the enemy chain of command, is crucial to the security and control of prisoners. Detainees are prevented from communicating with one another or from making audible clamor, such as chanting, singing, or praying. Uncooperative detainees are silenced by muffling them as appropriate. The EPWs and CIs may also be silenced to prevent them from planning escapes or disruptions.

Safeguarding

Safeguarding refers to the MP obligation to protect the safety of detainees and ensure the custody and integrity of confiscated items. Military police must safeguard detainees against combat hazards, from conflict with each other, and from improper treatment. Military police also safeguard EPWs and CIs by ensuring that they receive humane treatment. It is the responsibility of the unit that captures and holds detained persons to ensure their safety throughout all phases of detention operations.

Evacuating

Military police quickly transport detainees from their point of capture to collection points to avoid risks associated with that location. Speedy removal from familiar surroundings lessens the likelihood of an attempted escape and reduces the exposure of the detainee to the battlefield. To facilitate the rapid movement of EPWs and CIs to collection points, military police make maximum use of available transportation.

Field Processing

During the performance of their security tasks, military police are responsible for field processing of the detainees (e.g., medical care, evacuation, temporary holding areas).

Proper field processing of detainees, EPWs, CIs, and their associated evidence and property is essential for security and effective control of prisoners and intelligence gathering purposes. Processing also helps to establish the condition and welfare requirements of detainees, EPWs, and CIs. Field processing actions include the following:

- Individual searches.
- Segregation and interrogation.
- Sanitation.
- Medical care.

- Classification.
- Evacuation.
- Temporary holding areas.
- Security.

Individual Searches

Immediately upon capture, detainees, EPWs, and CIs must be disarmed and searched for concealed weapons and for equipment and documents of particular intelligence value. Detainees should be searched each time custody is transferred and searches should be documented.

During this phase of processing, items that may be of interest to intelligence personnel are confiscated by the military police and turned over to interrogation teams. Military police work closely with military intelligence teams to determine if captives and their equipment have intelligence value. Normally military police permit detainees, EPWs, and CIs to retain personal effects while retaining and documenting unauthorized items and contraband in accordance with theater regulations and the MAGTF SOP. Examples of personal items that are normally permitted to be retained on the detainee's person include the following:

- Money.
- Valuables.
- Protective equipment (e.g., helmets, protective masks).
- Articles used for clothing or eating, with the exception of knives and forks.
- Identification cards or tags.
- Badges of grade and nationality.
- Articles having a personal or sentimental value, to include religious items.

Segregation and Interrogation

Only trained and certified intelligence personnel will conduct intelligence interrogations. In accordance with DODD 3115.09, DOD personnel responsible for detention operations, including military police, security forces, master at arms, and other individuals providing security for detainees, are responsible for ensuring the safety and well-being of detainees in their custody in accordance with applicable law and policy. They will not directly participate in the conduct of intelligence interrogations.

Sanitation

Military police provide detainees, EPWs, and CI with sanitation facilities and supplies as soon as possible to permit them to disinfest themselves and their clothing. Soap and washing facilities are also made available when possible.

Medical Care

Military police coordinate and ensure that medical care, equipment, and supplies are administered to detainees, EPWs, and CIs. Although they are not normally assigned to medical facilities to process or guard captives, military police may be tasked to escort prisoners to medical facilities for care. Military police process these captives after medical personnel classify their physical condition.

Classification

Before evacuation, detainees, EPWs, and CIs are medically classified as walking wounded, nonwalking wounded, or sick. Walking wounded and sick are evacuated through MP evacuation channels. Nonwalking wounded and sick are delivered to the nearest medical aid station and evacuated through medical channels.

Evacuation

Military police coordinate the prompt evacuation of detainees, EPWs, and CIs out of the battlespace. The evacuation chain moves from the forward collection point to the rear area holding areas. In a joint operation, detainees, EPWs, and CIs are moved to a US Army internment camp.

While in a multinational environment, detainees may be transferred to forces from other nations.

Throughout the evacuation process, military police treat detainees, EPWs, and CIs humanely by ensuring that—

- They are not used to shield areas or facilities from attack.
- They are not retained for psychological operations.
- Food (e.g., religiously appropriate), potable water, appropriate clothing, shelter, and medical attention are provided if necessary.
- They are provided protective facilities and equipment in case of CBRN attack.
- Rigorous security is maintained to prevent escape and to protect US forces.
- The ability to conduct religious practices (e.g., prayer) is provided.

Temporary Holding Areas

When distances or conditions preclude the completion of detainee, EPW, and CI movement, military police may establish temporary holding areas along the evacuation route. If possible, military police select existing facilities that provide shelter from the elements as well as a perimeter fence, wall, or other barrier for security.

Security

Specific guidance concerning security requirements during the evacuation process, as well as other information on internment operations, can be found in Field Manual (FM) 3-19.40, *Internment/Resettlement Operations*.

When and where appropriate, NLWs should be used by properly trained personnel. See Chairman of the Joint Chiefs of Staff Instruction 3121.01B (S) (NOTAL), *Standing Rules of Engagement for US Forces/Standing Rules for the Use of Force*, and MCWP 3-15.8 for more information concerning the employment of NLWs.

Once field processing is completed, the military police are responsible for delivery of the detainees to collection points, as appropriate.

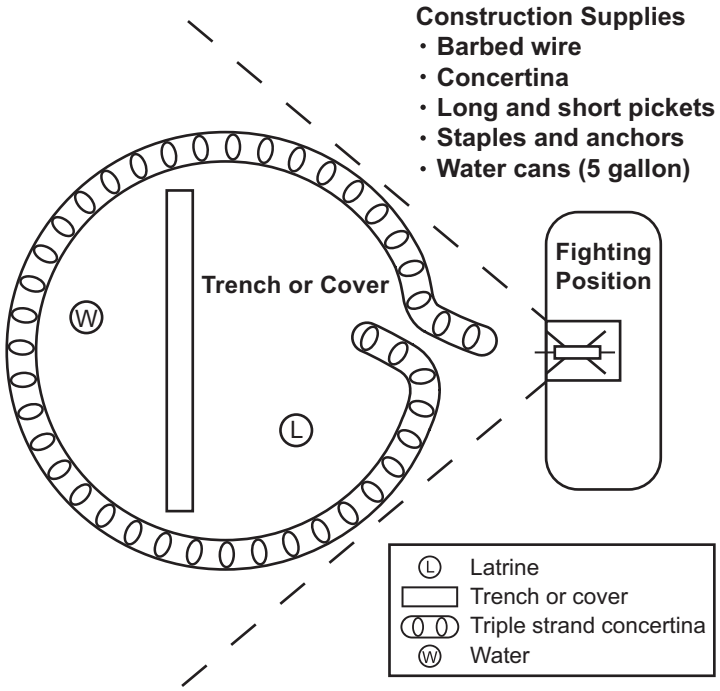

Figure 6-1. Initial Collection Point.

Collection Control Measures

To support EPW and CI collection and evacuation efforts, military police establish initial collection points, central collection points, and holding areas. Normally, military police establish and operate collection points to the immediate rear area of forward units in a linear battlespace or near supported units in a nonlinear battlespace, but they may be located wherever they are needed. If possible, collection points should be located near MSRs to ease the movement of detainees, EPWs, and CIs to the next echelon of detainment and to facilitate the transportation of supplies and medical support. Once transported to the collection areas, military police will use the appropriate biometrics systems and tools, such as biometric automated toolsets, to identify, track, and document detainee information.

Initial Collection Point

Military police set up and operate initial collection points to receive prisoners quickly from operating forces and to support the pace of the operations as shown in figure 6-1. The establishment of initial collection points allows for the rapid transfer of the custody of captives by capturing forces, without hindering their own combat effectiveness. At initial collection points, military police conduct security tasks, process and secure the captives, and prepare them for evacuation to a central collection point or holding area. Every detainee should be processed initially with a capture tag and assigned an ISN as soon as possible.

The size of the initial collection point enclosure and the placement of internal facilities, services (e.g., water, latrine, trench, cover), and force protection vary based upon the situation. Supplies and instructions on components are discussed in FM 5-34, *Engineer Field Data*.

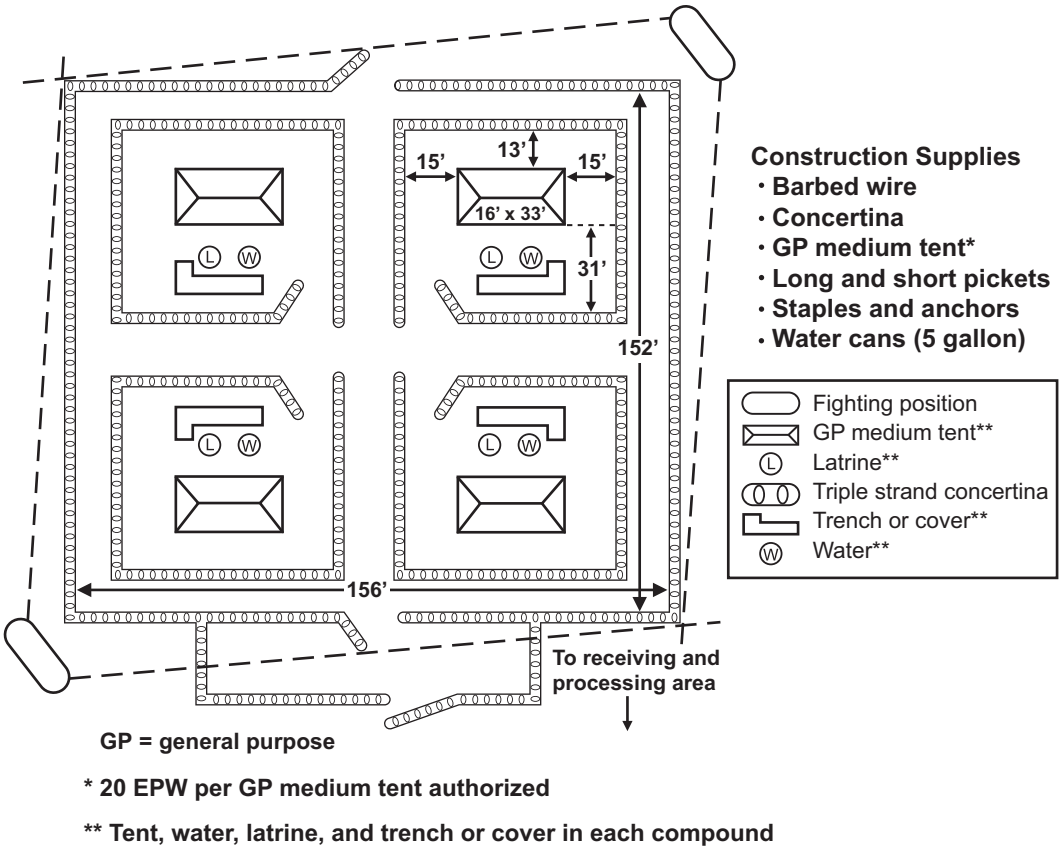

Figure 6-2. Central Collection Point.

The duration of stay at each echelon is driven by security, operational conditions, availability of transportation, and theater regulations. For example, the exploitation of intelligence from a detainee at the tactical level may require the holding unit to maintain the detainee for an unspecified time. Throughout each phase of detention operations, and between each echelon of custody, it is critical that the humane treatment of detained persons remains consistent and that strict accountability of detainees, property, and evidence is maintained.

Central Collection Point

A central collection point is larger than an initial collection point, but the considerations for setup and operations are the same. The detainees, EPWs, and CIs are held at central collection points until they can be transferred to holding areas. Military police use existing structures when possible to reduce construction requirements as shown in figure 6-2. The size, compound configuration, placement of internal facilities, field processing site, and military intelligence screening site vary based upon the situation. Instructions for the use of triple strand concertina wire can be found in FM 5-34. Central collection points will be established as required.

Holding Areas

A holding area is a temporary structure, building, or enclosed area, where detainees, EPWs, and CIs are held pending further evacuation. Holding areas accommodate more captives for longer stays than collection points. Most holding areas, like collection points, are temporary facilities that must be able to move with little or no notice. Prisoners are interrogated and detained in holding

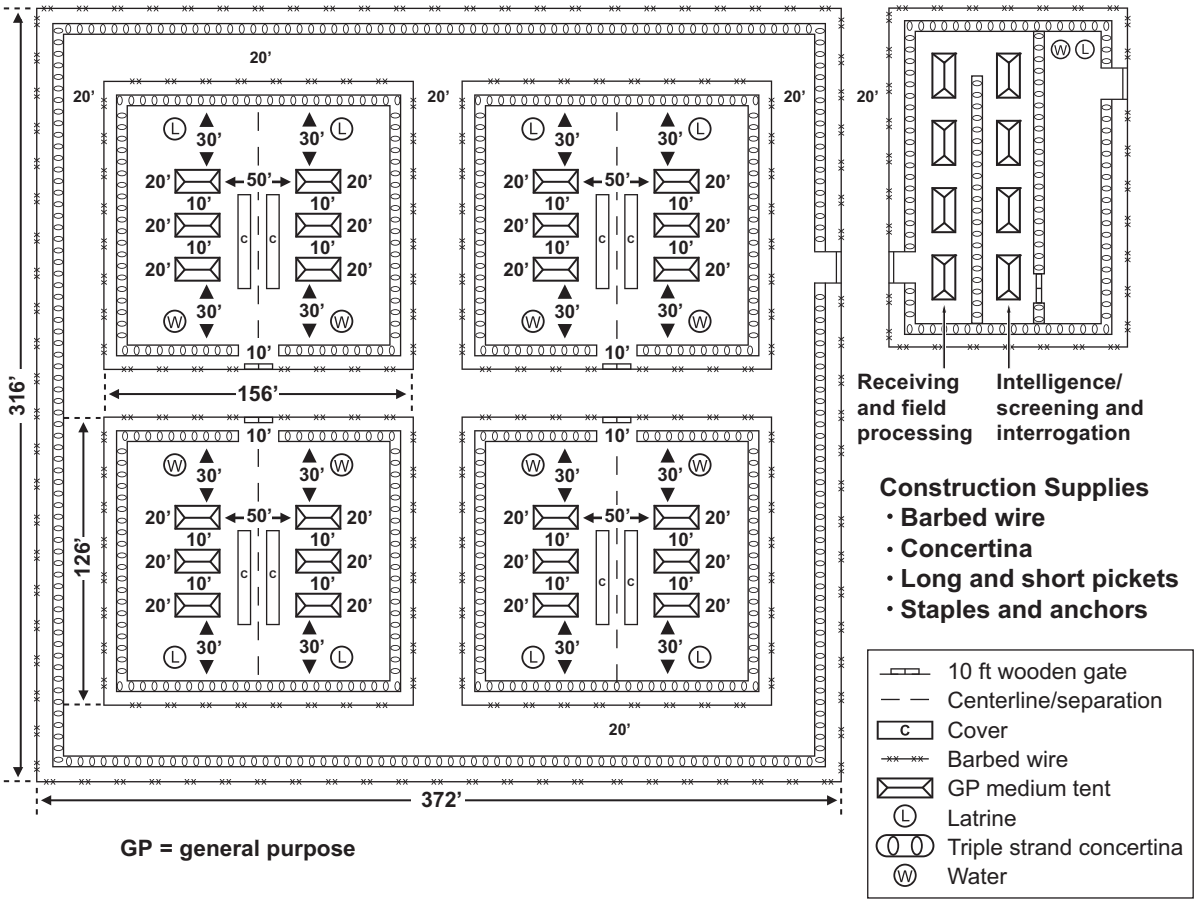

Figure 6-3. Holding Area.

areas until they can be evacuated further to the rear. Although holding areas are temporary facilities, captives may remain at a holding area until they can be moved to a more permanent detainment facility.

Usually one holding area is set up to support each MAGTF conducting operations. The first consideration in the selection of an EPW holding area is that it be adjacent to the evacuation route (i.e., MSR). Related considerations include the location of suitable existing facilities, proximity to supply areas, and protection from enemy activities. Holding areas are operated on an austere basis and should be designed to meet the minimum requirements necessary for the temporary retention of detainees, EPWs, and CIs. Figure 6-3 is an example of a holding area with four, 120-person segregation compounds. This area includes receiving, field processing, screening, and intelligence collection sites.

Detainee Reporting System

The Detainee Reporting System (DRS) is the mandated detainee accountability database for all DOD agencies and operations. The DRS may not be used in multinational operations. The key functions of the DRS at a detention facility and RDF include the following:

- Assigning ISNs.
- Documenting detainee transfers, releases, and repatriations.
- Recording detainee deaths.
- Recording detainee escapes.

The timely and accurate reporting of data through the DRS is critical in order to ensure detainee accountability. As detainees are collected and processed, the *Geneva Convention* require that their information be forwarded to the appropriate authorities and failure to do so may bring unwanted scrutiny upon the US Government for neglecting its duties under international laws.

The National Detainee Reporting Center (NDRC) is the executive agent designated by the US Army Office of the Provost Marshal General to receive and archive all detainee information. The NDRC provides detainee information to the ICRC to fulfill US obligations under the *Geneva Convention* and various agencies in the DA, DOD, the Federal Bureau of Investigation, and the Congress of the United States. The NDRC's principal responsibility is to ensure the collection, storage, and appropriate dissemination of detainee information as required by MCO 3461.1, and DODD 2310.01E. The NDRC directs the development of a DRS and issues blocks of ISNs to theater detainee reporting centers (TDRCs).

The TDRCs function as field operations agencies for the NDRC. They report all detainee data directly to the NDRC. The TDRCs are responsible for maintaining information on all detainees and their personal property within an assigned table of organization. They obtain and store information concerning all detainees in the custody of the US Armed Forces. This also includes detainees captured by US Armed Forces and transferred to other powers for detention or those received from other powers for detention by US forces—either temporarily or permanently. The TDRCs serve as theater repositories for information pertaining to detainee accountability and ensure the implementation of DOD policy. They provide both the initial and replenishment blocks of ISNs to the units performing detainee operations in-theater as they are needed and will request additional blocks of ISNs from the NDRC as needed. The detention facility and RDF request ISNs from the TDRC and forward all information concerning the detainees to the TDRC.

Once an ISN is issued, the issuing activity should provide detainee information to the TDRC. The ISN will be used as the primary means of identification throughout the detainee's detention. It is used to link the detainee with biometric data, personal property, medical information, and issued equipment.

Internment Serial Number

The ISN is the DOD-mandated identification number used to account for and/or track detainees (see fig. 6-4). Once an ISN is assigned, it is used on all detainee documentation. The ISN is generated by the DRS. The DRS is the only approved system for maintaining detainee accountability. It is the central data-point system used for reporting to the national level and sharing detainee information with other authorized agencies. The ISNs are normally issued within 14 days of capture, regardless of where detainees are held, or according to applicable policy. The following components comprise the ISN:

- Capturing power—a two-digit alpha character code representing the capturing power. Only country codes found in the Defense Intelligence Agency Manual 58-12, *The Department of Defense Human Intelligence System*, are used.
- Theater code—a one-digit number representing the command/theater under which the detainee came into US custody.
- Power served—a two-digit alpha character code representing the country that the detainee is fighting for. Only country codes found within the Defense Intelligence Agency Manual 58-12 are used.
- Sequence number—a unique six-digit number assigned exclusively to an individual detainee. The DRS assigns these numbers sequentially. If a detainee dies, is released, repatriated, transferred, or escapes, the detainee's number is not reissued during the same conflict.
- Detainee classification—a two- or three-digit alpha character code representing the detainee's classification. Current classifications are CI, RP, and EC.

The detainee information is reported through the TDRC to the NDRC. The TDRC is collocated with the commander of the detainee operations. This may be at the detention facility or RDF if no commander of the detainee operations is appointed. Once the DRS creates an ISN, no component may be changed or corrected at theater level without approval from the NDRC. All changes to ISNs must be requested in writing and approved by the NDRC.

When required by law and/or policy, the NDRC provides detainee information (e.g., point of capture, country of origin, injury status, internment status) to the ICRC to satisfy the obligations of the *Geneva Convention*. The ICRC uses this detainee information to give the detainee's status to his respective government. Commanders should attempt to standardize the tracking of detainees

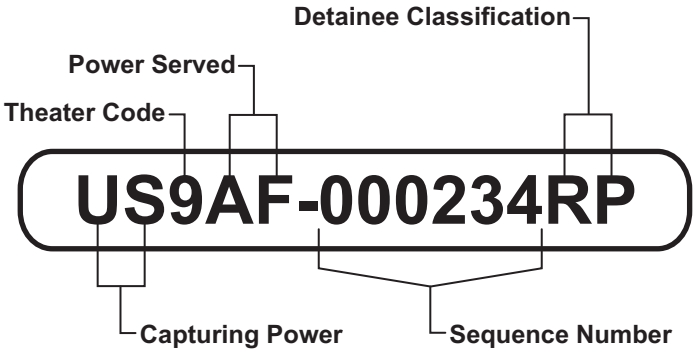

Figure 6-4. Internment Serial Number.

from the point of capture through the issuance of an ISN. The number assigned by DD Form 2745 is the only authorized tracking number that may be used before the assignment of an ISN. After an ISN is assigned, previously completed documents should be annotated with the assigned ISN. For example, medical channels should use the DD Form 2745 number first and then use the ISN once an ISN has been issued to the detainee. The DRS will cross-reference the ISN and the DD Form 2745 numbers for administrative purposes.

If a detainee is inadvertently issued a second ISN (e.g., due to clerical error, recapture), the processing personnel will contact the NDRC, which will correct the sequence, since gaps are not permitted in the official records and numbering of detainees.

Detainee Identification Band and Identification Badge

The requirements for identifying a detainee by name and ISN are many and varied. Among the more common reasons are—

- Verifying detainee rosters against the actual compound population.
- Identifying compound work details.
- Matching detainees with their individual medical records.
- Checking the identities of detainees to be transferred or released against actual transfer rosters.
- Tracking through medical channels.

The detainee identification band or badge (e.g., produced by biometric automated tool sets) permits rapid and reliable identification of each detainee. Identification bands or badges enhance facility administration and operation. The detainee's ISN and last name are recorded on the identification band and secured to the detainee’s left wrist. If the appropriate bands are not available, a medical wristband or similar item may be used.

When the identification band has serious deterioration or the ISN and name are obscured, the identification band will be replaced with a new one. Periodic random checks of detainee identification bands will detect normal wear and tear and any efforts to destroy the bands. When inspecting for normal wear and tear, also check for any evidence of detainees exchanging bands. Such exchanges are very possible and should be expected; however, removal of the identification band by the original wearer will result in damage that is easily detected. When positive identification is essential, such as for transfer or hospitalization, the identification band should be examined carefully for any evidence of such tampering. Additionally, periodic routine inspections will be conducted of randomly selected identification bands during compound inspections or at other opportune times. These random inspections will help detect any attempt to tamper with or exchange an identification band.

CHAPTER 7
PLANNING AND TRAINING

Military police SNCOs and commissioned officers provide both MP specialized and general planning and training support at the MEF, MEF MSC, and company levels. Each MSC has a staff noncommissioned and commissioned officer assigned to provide MP planning, training, coordination, and oversight. Specialized support is primarily located in the MEF with the MP support company under the MEF headquarters group. If additional planning, training, or MP support is required beyond the organic capability of MSC military police, the MSCs should request support from the MEF. The Marine Corps establishes and task organizes in-lieu-of MP units when requirements for MP units exceed MP unit availability. In-lieu-of MP units are non-MP units trained to conduct certain MP tasks.

Planning

The planning efforts of the military police reflect the combination of the multiple and diverse capabilities of all participants in a joint, interagency, or multinational environment. Military police keep lines of communications open and provide coordination to offset the cultural challenges presented by this interoperability. Such challenges include the following:

- Political objectives differences.
- Capabilities differences.
- Cultural and language differences.
- Legal and policy constraints.
- Media involvement and impacts.
- Compromising sensitive processes, procedures, and equipment.
- Command and control.
- Communications (e.g., digital, analog equipment differences).

Considering these challenges, MP plans must also accommodate the differences involved when planning functional capabilities and consider the different actions encountered in transitions throughout the full range of military operations. The MP leaders must understand how to connect operational objectives to tactical tasks. By describing their objectives and grouping them by desired and undesired effects within the AO, MP force planners can help guide the initial analysis. This, along with the commander's intent and planning guidance, helps MP staffs identify potential tasks and functions for military police.

In addition to defining MP forces and resources, interaction with other agencies must be considered. Coordination is the key to mission success in joint, interagency, intergovernmental, and multinational operations. Extensive communication with the civil support staff and planners aids in the coordination of issues; therefore, MP efforts may require contact with the following nonmilitary agencies:

- Government organizations.
- Interagency law enforcement organizations.
- Nongovernmental organizations.
- International organizations.
- International humanitarian organizations.
- HN authorities and agencies.

The MEF, MEF MSC MP officers, and SNCOs provide MEF- and MSC-level planning. Additionally, the MEF MP support company and MEF MSC MP companies provide planning support to individual units within the MEF and MEF MSC. If MP planning requirements exceed the MSC's capability, support should be requested from the MEF.

Interagency Coordination

By understanding the influence of other agencies, commanders can add diplomatic, informational, and economic depth to their military efforts. The capabilities of the US military allow other agencies to interact with foreign powers from a position of strength and security. Unified action of all US Governmental organizations is a desired end state in any conflict. In order to achieve this end state, commanders must recognize the challenges associated with interagency cooperation and proactively mitigate the friction inherent in interagency operations with effective prior planning, coordination, and training. Military police provide a vital linkage between the commander and interagency law enforcement agencies. Military police support the commander's intent through the conduct of interagency coordination and liaison at the lowest operational levels in order to resolve potential conflicts and maximize the benefits of unified action.

Training of In-Lieu-of-Forces

Military police provide MP mission-oriented training for Marines assigned as in-lieu-of MP forces or when Marines have been assigned a mission that requires specialized skills (e.g., evidence collection, site exploitation, TQ, detention operations). When the Marine Corps fields in-lieu-of MP units, it is recommended that MP SMEs fill key staff positions in these units to provide critical MOS expertise. In-lieu-of forces lack the requisite training, knowledge, and experience to provide all of the MP doctrinal functions required in a deployed environment.

Military police predeployment training should focus on specific assigned tasks, such as LDO. Ideally, in-lieu-of MP units will be embedded with MP subject mater experts who would participate in unit predeployment training and deploy with the unit to theater. Predeployment training should include the equipment that is currently being used at the in-theater location of deployment. In-lieu-of MP units should incorporate scenario-based training that includes use of friendly force tracker, biometrics, electronic countermeasures equipment, force continuum TTP, and IED detection and response. Marines should also experience training that simulates conditions in the AO, for example—

- Handling differences that are associated with HMMWVs [high-mobility multipurpose-wheeled vehicles] that have the additional weight of added armor.
- Enduring cramped quarters for tasks that last 12 or more hours, while wearing the required personal protective equipment.

In-lieu-of MP forces should receive both predeployment and during deployment training as follows:

- Basic in-lieu-of MP training should be accomplished prior to the deployment and follow-on training should be accomplished during the deployment after arriving in-theater.
- Basic in-lieu-of MP training should be accomplished by the military police organic to the MEF MSC, if available, and the MEF, if not available. Additional support should be requested if the requirement is beyond the MEF's ability to support. Basic MP skills training should focus on the individual and collective tasks necessary for anticipated missions per NAVMC 3500.10, *Military Police and Corrections Training and Readiness Manual.*
- Follow-on MP training should focus on specific mission tasks after the mission analysis has been completed.
- Refresher MP training should be accomplished by an organic MP (i.e., MP detachment assigned to a command or unit) detachment while en route, if possible.
- An operational MP unit already deployed in-theater could provide a mobile training team (MTT) to train an in-lieu-of MP force once in-theater.
- Teacher-to-student ratio should be 1 to 25, which is in accordance with Training and Education Command's standard student-instructor ratio for classroom instruction.

The following MP training in CONUS occurs during predeployment:

- MP training for designated in-lieu-of military police is conducted by the MEF MP support company, MSC MP company, MSC MP staff officer, MEU MP detachment, or MP MTT. Time should be allowed for the proper training and access to additional personnel and equipment, if required.
- Adequate training areas are determined as required by mission analysis for the MP training being conducted.
- MP training occurs during MEU or other MAGTF workups and preparations required to deploy.
- The Military Police Center of Excellence has developed an in-lieu-of MP program of instruction and MP course descriptive data.
- Mojave Viper or an alternative venue, such as Cajun Viper, ensures that MP training provides the in-lieu-of MP appropriate skills and prepares the in-lieu-of MP for battle.

During deployment, MP trainers will complete the required MP training for in-lieu-of MPs. Military police trainers may be sourced from in-theater MP units or organic MP trainers.

Military Police and Law Enforcement Training

The MEF MP support company and MEF MSC MP companies can provide specialized training to enhance the skills of deploying Marines for certain missions (e.g., detective, criminal investigations, MP skills, law enforcement skills). It is recommended that commands integrate law enforcement training into predeployment training programs and exercises. Reservists who are law enforcement professionals can be identified and aligned with units to serve as trainers. In order to gain experience, additional types of training provided for deploying Marines are as follows:

- Participating in local, state, and federal law enforcement organization, providing on-the-job training.
- Participating in command-coordinated "ride-along" events with local law enforcement organizations.

Law Enforcement Advisor

The purpose of the law enforcement advisor is to provide the commander with an experienced law enforcement perspective on criminal network enterprise operations within his AO. Based on specific operational requirements, law enforcement advisor personnel may be sourced from the interagency law enforcement community, contracted support (e.g., US Army's Law Enforcement Professional Program), MP, CID, NCIS, Marine Corps reservist, or civilian police officer (with the appropriate depth of applicable law enforcement training and experience).

The threat confronting deployed forces may incorporate an operational framework including guerilla, insurgent, and profit-motivated organizations exhibiting strong criminal network characteristics. Conventional military forces and associated information collection methods and analytical processes, even when augmented with special operations experts, lack the full range of skill sets and experience necessary to understand and attack complex criminal and insurgency networks. Law enforcement advisors with the requisite anti-criminal, network analytical, and investigative skill sets may be used by US military units when required by the mission.

Law Enforcement Advisor Responsibilities

The responsibilities of law enforcement advisor personnel embedded within a Marine Corps unit will vary according to the requirements of the commander and the nature of the operation. The

following list provides an overview of law enforcement advisor tasks used to effectively understand, identify, target, penetrate, interdict, and suppress criminal (i.e., insurgent) and IED networks:

- Identify criminal hot spots—both meeting places and IED locations—and advise commanders and staffs on methods to recognize signs of radicalization in assigned AOs.
- Identify methods to enhance local community participation in police information and intelligence gathering.
- Cultivate community and individual assistance by understanding the local leadership, centers of influence, and activities within the community (e.g., normal verses abnormal activity).
- Identify the threat and AO dynamics through cultivation of community support networks and identification of deceptive means that may be employed to source, produce, deliver, emplace, and detonate IEDs.
- Provide advice and support to deliberate offensive actions that result in the ability to effectively attack, disrupt, and neutralize criminal and IED networks.
- Examine, recommend, and support means and activities that discourage the regeneration of IED cells, including activities intended to create confidence and earn the trust of HN and local populations.
- Advise and mentor Marine forces as they collaborate with and build capacity among HN police and security forces.
- Advise on and support actions that ensure HN law enforcement and security forces maintain a visible, capable, responsive, and proactive presence in order to instill confidence within the population.
- Support JPEC and joint interrogation and debriefing center operations as required.
- Serve as the supported battalion commander's law enforcement criminal network subject matter expert and primary training resource for police skills in the absence of military law enforcement personnel.
- Coordinate directly with law enforcement advisor counterparts at higher and subordinate headquarters and neighboring units to ensure the unity of effort and synchronization of effort.
- Apply a law enforcement countercriminal perspective to the execution of counterinsurgency operations to the supported battalion's area of responsibility.
- Coordinate with HN law enforcement assets to strengthen and encourage trust, confidence, cooperation, and information sharing between local assets and the supported unit.
- Accompany mounted and dismounted patrols on street-level operations in hostile threat environments within the supported battalion's AO to instruct and mentor on law enforcement TTP and to provide immediate feedback and assistance.
- Participate in TQ and debriefing of suspects and detainees.
- Provide assistance to the development of detainee packages by the unit or HN law enforcement and security forces.
- Coordinate operational and tactical investigations and judge advocate general investigations as directed.
- Conduct site exploitation.
- Train, mentor, and advise Marines in conducts of site exploitation.

Law Enforcement Training, Tactics, and Procedures

The emerging trend involving the blending of military and law enforcement related TTP is designed to enhance warfighting capabilities with specialized law enforcement skills (e.g., forensics, evidence collecting, site exploitation [i.e., crime scene processing], profiling, TQ). The application of these skills will enable Marines to confirm and exploit targets, as well as expand the unit's capability to respond to hybrid threats

across the full range of military operations. The law enforcement TTP will enable Marines to—

- Develop the ability to conduct forensics, evidence collection, and sensitive site exploitation.
- Develop the ability to conduct biometrics collection and exploitation (e.g., fingerprints, DNA [deoxyribonucleic acid], facial recognition).
- Develop the ability to conduct AO-specific profiling.
- Develop an understanding of criminal network enterprise operations.
- Develop criminal and forensic intelligence capabilities.
- Develop surveillance skills.
- Develop tactical interviewing and questioning techniques.
- Provide training in criminal patrolling tactics.
- Identification of insurgents, foreign fighters, criminals, and bombmakers via street contacts, interviews with suspicious people, sources, and contacts with local community members and the criminal element on a daily basis.
- Patrol in active insurgent areas during times of enemy activity. Maximize efforts and personnel to attack problem areas. Every patrol has a directed purpose.
- Vary times and locations of patrols. Concentrate efforts after dark when insurgents and criminals conduct IED operations, move weapons and explosives, and emplace IEDs to restrict the enemy's ability to work at night.
- Display a proactive, aggressive patrol with an offensive mindset and interview anyone displaying suspicious or unusual behavior. Immediately conduct aggressive control techniques by checking for weapons, car alarms, cell phones, cameras, large amounts of cash, the digging of holes, and the usage or dealing of drugs.
- Interdict IED and terrorist and criminal cells and disrupt the flow of components to build IEDs and vehicleborne IEDs (e.g., electronics, long-range cordless phones, satellite phones, cell phones, machine shops, car repair shops, car dealerships).

Training for Units Deploying to Conduct Detention Operations

Units preparing to deploy with a detention operation mission should receive mission-oriented training prior to deployment. Training should be tailored to the deploying location's detention standard in the AO. Usually the corrections specialists provide the training, sometime augmented by the military police, in conjunction with either the local MEF corrections specialists or the MTT.

Training for units deploying to conduct detention operations includes, but is not limited to, the following:

- Detention facility or RDF detention operations.
- Detention facility or RDF guard duties.
- SROE or rules for the use of force.
- NLWs.
- Handcuffing techniques.
- Detainee transporting, escorting, and release.
- Temporary detention facilities.
- Training tailored to the AO standard and intensity level requested by the deploying unit.
- Required training aids, role players, and facilities that are conducive to realistic training.
- Training should be based upon the corrections instructor and unit input.
- Convoy operations scenarios to simulate detainee transfer and release operations.
- Riot formations and cell extractions.
- Specific training on the detention facility or RDF SOP that the unit will use during the deployment.
- Language training.
- *Geneva Conventions* training.
- Biometrics and biometric automated tool sets usage.
- Property accountability.

- Evidence handling and processing.
- Communications.
- Law of war.

The OICs and SNCOICs also require specific predeployment training to address their responsibilities, reports, and supervisory duties at the detention facility or RDF.

Personnel Deploying to Conduct Detention Operations

Corrections specialists and all other personnel engaged in detention operations shall receive the following minimum predeployment training:

- Basic area language training.
- Rule of law.
- Criminal mind-set and staff awareness.
- Universal precautions on diseases.
- SRUF and SROE.
- Contraband and control procedures.
- Restraint procedures.
- Accountability procedures.
- Emergency actions for fire, escape, bomb threats, and disorder.
- Main gate and sally port procedures.
- Visitation and escort procedures.
- Tower guard procedures.
- Disciplinary and adjustment procedures.
- Unarmed self-defense.
- Forced cell move and riot control procedures.
- NLWs and INIWIC qualification.
- Biometric automated tool sets.
- Evidence collection, handling, and storage procedures.
- Ground transport procedures.
- Air transport procedures.
- IED awareness.

APPENDIX A
CUSTOMS AND BORDER CLEARANCE PROGRAM

It is DOD policy to assist and cooperate with US and foreign HN border clearance agencies in halting the flow of contraband into the US and foreign countries and enforcing this policy when entry is through military channels. This policy applies to the export of US goods to and through other countries and enforcement of DOD policy to eliminate the flow of contraband and unacceptable products to other nations. Areas of enforcement include compliance and enforcement of US and foreign laws and regulations and customs requirements (e.g., agriculture, immigration).

Note: The DOD acknowledges the primacy of the Department of Homeland Security, CBP, and the US Citizenship and Immigration Services over cargo and personnel moving into the CTUS. They also acknowledge that those officers or inspectors may delay, impound, or otherwise prohibit the entry or export of military cargo into or from the CTUS, without obstruction by the DOD, the Services, or defense agencies.

Military police provide commanders a high degree of flexibility through the execution of customs operations. During the execution of these operations, commanders and their staff (e.g., geographic combatant commander, deployed commander, staff officers) should be familiar with the military customs inspection program per DODD 5030.49, *DOD Customs Inspection Program*, and DOD Regulation 4500.9-R, *Defense Transportation Regulation (DTR)*, applicable to all international movement of DOD cargo and personnel at the time they cross the border. In the MEF or MAGTF, military police are trained as military customs inspectors-excepted (MCI-Es) and customs and border clearance agents (CBCAs). They coordinate with joint and US Federal agencies to ensure compliance with regulations and applicable provisions of international agreements by detecting and investigating violations and conducting inspections concerning the CTUS. Responsibilities, training, and certification needed to perform these duties are detailed in this appendix.

When deemed to be beneficial to the DOD, CBP, or USDA, preclearance programs may be established. Under certain circumstances (e.g., major unit rotations, redeployments in conjunction with exercises and contingency operations), cargo and personnel returning to the United States can be "precleared" (e.g., inspected and/or certified at the point of origin instead of at the US border). These preclearance programs will be initiated only when the theater command, United States Transportation Command (USTRANSCOM), and the respective US agency or agencies explicitly agree to their establishment. Procedures for requesting the establishment of a preclearance program are detailed in DOD 4500.9-R, chapter 506.

Responsibilities

Military Services

- Establishes points of contact for coordination and implementation of the program within their respective components.
- Ensures that the shipment sponsor's shipping activities prepare customs documents (e.g., foreign country, CBP) for use by carriers and government agencies to gain entry or exit for DOD shipments.
- Takes any actions required to correct program deficiencies.
- Provides facilities and other assets, through inter-Service or defense agency support agreements, for the performance of customs and border clearance functions.

- Furnishes information to USTRANSCOM to resolve customs and border clearance issues (e.g., preclearances) per DOD 4500.9-R, chapter 506.
- Provides representation on committees or working groups as requested by USTRANSCOM.
- Assists USTRANSCOM in the development and collection of metrics data and the evaluation of the DOD Customs and Border Clearance Program (CBCP).
- Provides customs and border clearance documents necessary for entry officials to clear personnel and cargo entering or exiting the United States or foreign countries.
- Follows the theater, destination, and in-transit country national customs and movement certification requirements contained in theater transportation regulations.

Geographic Combatant Commander

- Implements and enforces provisions of DOD 4500.9-R.
- Establishes and coordinates any unique customs and/or border clearance requirements for countries in the commander's areas of responsibility during deployments or redeployments and in support of exercises or contingency operations.
- Designates a customs and/or border clearance coordinator.
- Forwards any written supplementary guidance to USTRANSCOM (TCJ5/4).
- Ensures Service components designate, in writing, DOD or other personnel as CBCAs and that those personnel are properly trained.
- Establishes quality control procedures to ensure the effectiveness of the DOD CBCP.
- Disseminates information within the command to all DOD members, employees, and family members concerning the prohibitions, restrictions, requirements, and penalties pertaining to the importation of illegal narcotics and drugs, prohibited firearms, and other contraband.
- Establishes policy and official guidance on control and retention of war trophies or souvenirs.
- Provides details on prohibitions, restrictions, requirements, and penalties that pertain to the entry or exit from their theater of operations to USTRANSCOM (TCJ5/4), as it impacts the DOD CBCP.
- Assists USTRANSCOM in the development and collection of metrics data and evaluation of the DOD CBCP.
- Keeps the subunified commands informed on issues relating to customs or border clearance.

Geographic Combatant Command
Customs and Border Clearance Coordinator

- Coordinates the DOD CBCP for the theater commander.
- Serves as the primary point of contact for the customs or border clearance requirements on matters of importance concerning the entry or exit of DOD-sponsored movements.

Deployed Commander

- Ensures that unit personnel (i.e., military, civilian, and contractors) are briefed on CBP and USDA entry requirements prior to their redeployment to CONUS or OCONUS and that all unit equipment or sustainment stocks returning to CONUS and OCONUS are cleaned and inspected per USDA-recommended procedures. See DOD 4500.9-R, chapter 505, for details.
- Ensures that shipping, customs, and border clearance documentation, is available for each shipment or passenger and that documentation is prepared and free of abbreviations or acronyms to ensure entry or exit.
- Implements requirements in DOD 4500.9-R (chapter 501, paragraph D.9) and maintains performance quality that will ensure customs or border clearance agencies (i.e., foreign and domestic) certification.

MEF, MAGTF PM, or
MEF MSC MP Staff Officer

- Establishes and conducts a military customs program as directed and per DOD 4500.9-R.
- Appoints, provides training for, and obtains proper certification for MCI-Es and CBCAs per DOD 4500.9-R and appropriate regulations.

Military Customs Inspector-Expected

- Performs duties per DOD 4500.9-R and US and/or foreign country border clearance requirements.
- Inspects or examines baggage, professional equipment, and cargo as authorized in established memorandums of understanding and designated on that person's Customs Form 55, *Designation, Customs Officer-Excepted*. All passengers and crewmembers are subject to inspection. The degree to which accompanied baggage or equipment is inspected or examined is dependent upon the discretion and judgment of the MCI-Es. "Dumping" of baggage contents is against both DOD and CBP policy and is prohibited.
- Accomplishes inspections in a courteous and professional manner.
- Inspects only active duty military personnel. Civilian personnel will be inspected by a CBP officer.
- Reports any contraband discoveries (e.g., drugs, firearms, explosives) to the closest CBP port director and the installation commander immediately.

Customs and Border Clearance Agents

- Performs duties per DOD 4500.9-R and US and/or foreign country border clearance requirements.
- Inspects and certifies that DOD-owned material, personal property, and passengers are acceptable for entry into the United States and notifies the appropriate legal authorities if contraband is discovered.
- Represents the commander in performance of inspections and ensures that the proper and/or required documentation accompanies all shipments or personnel.
- Ensures that customs and border clearance violations are expeditiously reported to the proper legal authority or military agency for disposition.
- Conducts all inspections and examinations in a professional, expeditious, and courteous manner.
- Does not, under any circumstances, collect or accept duty payments.

Training and Certification of Military Customs Inspectors-Excepted and Customs and Border Clearance Agents

The MCI-Es and CBCAs will be trained per DOD 4500.9-R. Training will be provided and approved by CBP and USDA. Training may be accomplished in CONUS or at an overseas location. Upon successful completion of the training, CBP and USDA will provide certification for the trainees. Certified trained personnel will be appointed as CBCAs on orders issued by the sponsoring Service component and those orders will include an effective termination date.

The geographic combatant commander and the Service component commander will coordinate the request to the Service for sourcing of military law enforcement or other designated personnel to act as CBCAs for the duration of the redeployment. All personnel designated for MCI-E or CBCA duties will be E-4, the civilian equivalent, or above.

In some cases CBP may approve DOD personnel as certified trainers. When a "train the trainer" process is approved, commanders will be required to—

- Use a CBP and USDA-approved CBCA training curriculum.
- Provide program management, as well as any command-specific training.

Employment

Marines trained as MCI-Es or CBCAs will perform their duties according to DOD 4500.9-R and other implementing regulations. They represent their commanders by performing inspections and examinations, reporting violations to their supervisor and validating shipping documents. The MCI-Es or CBCAs are employed to inspect DOD-sponsored cargo, military impedimenta, ships, aircraft, vehicles, and personnel.

APPENDIX B
SAMPLE MILITARY POLICE SUPPORT ESTIMATE

The following sample format may be modified as necessary to meet situational requirements.

CLASSIFICATION

Copy no.__ of __copies
OFFICIAL DESIGNATION OF COMMAND
PLACE OF ISSUE
Date/time group
Message reference number

MILITARY POLICE SUPPORT ESTIMATE (U)
(U) REFERENCES: As appropriate to the preparation of the estimate.

1. (U) Mission

a. (U) Basic Mission. State the mission and its purpose as described in the basic plan.

b. (U) Purpose of the Estimate

(1) (U) Determine if military police (MP) capabilities are sufficient to support proposed courses of action (COAs).

(2) (U) Determine which COA is most desirable from an MP support standpoint.

(3) (U) Determine what measures must be taken by the commander to overcome MP support problems and/or limiting factors in supporting each COA.

2. (U) Situation and Considerations

a. (U) Enemy Forces

(1) (U) Present Disposition of Major Elements. Reference may be made to the Intelligence Estimate.

(2) (U) Major Capabilities. Enemy tactical capabilities likely to affect friendly MPsupport matters.

CLASSIFICATION

(3) (U) Other Capabilities and/or Limitations. Enemy capabilities and/or limitations likely to affect the MP or tactical situation.

b. (U) Own Forces

(1) (U) Present Disposition of MP Support Elements. May be shown as a situation map or an overlay appended as an annex.

(2) (U) Courses of Action. A statement of the COA under consideration.

c. (U) Characteristics of the Area. Those likely to affect the MP support situation, such as weather, terrain, hydrography, communications routes, and local resources.

d. (U) Current MP Support Status. A brief description of the current MP support status, which includes planned or known changes before and during the period covered by the estimate. Follow-on subparagraphs address typical MP support areas of concern; if possible, state specific quantities.

(1) (U) MP Support Organizations and Task Organizations. Each organic support organization or task organization is described using the following format:

(a) (U) Locations. May be an overlay.

(b) (U) Missions and/or Tasks

(c) (U) Task Organizations and Command Relationships

(d) (U) General Capabilities and Status. Capabilities and status are described in terms of task organization using the applicable categories listed in paragraphs (2) through (9) below.

(e) (U) Tactical Responsibilities. If any.

(f) (U) Communications and Automated Data Processing Systems Support Arrangements

(2) (U) Personnel

(a) (U) Strengths. Identify strengths of each major subordinate unit.

(b) (U) Replacements. Identify replacements on hand, replacements to be received, and the quality of the replacements.

(c) (U) Morale. Determine the level of fighting spirit, significant factors affecting current morale, religious and welfare matters, and awards.

(d) (U) Personal Services Support

CLASSIFICATION

(e) (U) Military Justice. Court martial and correction facilities.

(f) (U) Personnel Procedures. Significant items, if any.

(3) (U) Mission Assurance Support Operations

(4) (U) Law and Order

(5) (U) Military Working Dogs

(6) (U) Limited Detainee Operations

(7) (U) Planning and Training

(8) (U) Corrections

(9) (U) Customs Support

e. (U) Assumptions. A statement of those assumptions made for the preparation of this estimate. An example of the critical assumption is the estimation of the length of time for the entire operation and for each COA (if different).

f. (U) Special Factors. Items covered elsewhere, such as state of training of MP support personnel or task organizations.

3. (U) Analysis. Each COA under consideration is analyzed, in the light of all significant factors, to determine problems that may arise, measures required to resolve those problems, and any limiting factors that may exist. Omit areas not applicable. State all considerations of the analysis that have equal effects on all proposed COAs.

a. (U) Course of Action #1

(1) (U) MP Support Organizations and Task Organizations. Each organic support organization or task organization is described using the following format:

(a) (U) Locations. May be an overlay.

(b) (U) Missions and/or Tasks

(c) (U) Task Organizations and Command Relationships

(d) (U) General Capabilities and Status. Capabilities and status are described in terms of task organization using the applicable categories listed in paragraphs (2) through (9) below.

(e) (U) Tactical Responsibilities. If any.

CLASSIFICATION

(f) (U) Communications and Automated Data Processing Systems Support Arrangements

(2) (U) Personnel

(a) (U) Strengths. Identify strengths of each major subordinate unit.

(b) (U) Replacements. Identify replacements on hand, replacements to be received, and the quality of the replacements.

(c) (U) Morale. Determine the level of fighting spirit, significant factors affecting current morale, religious and welfare matters, and awards.

(d) (U) Personal Services Support

(e) (U) Military Justice. Court martial and correction facilities.

(f) (U) Personnel Procedures. Significant items, if any.

(3) (U) Mission Assurance Support Operations

(4) (U) Law and Order

(5) (U) Military Working Dogs

(6) (U) Limited Detainee Operations

(7) (U) Planning and Training

(8) (U) Corrections

(9) (U) Customs Support

b. (U) Course of Action #2. Same subparagraphs as shown for COA #1.

c. (U) Course of Action #3. Same subparagraphs as shown for COA #1.

4. (U) Evaluation. From an MP support standpoint and based on the foregoing analyses, summarize and compare the advantages and disadvantages of each COA under consideration.

5. (U) Conclusion

a. (U) Preferred Course of Action. A statement as to which COA, if any, can best be supported from the MP support viewpoint.

b. (U) Major Disadvantages of Other Courses of Action. A statement whether any or all remaining COAs can be supported from MP support viewpoint citing the disadvantages that render the other COAs less desirable or unsupportable.

Page number

CLASSIFICATION

CLASSIFICATION

c. (U) MP Problems and Limitations. A statement of significant problems to be resolved and any limitations to be considered in each COA.

d. (U) Decision or Action. A statement of measures required to resolve MP support problems cited above that must be brought to the attention of the commander.

/s/ _____

_____

ANNEXES: (As required)

Page number

CLASSIFICATION

APPENDIX C
PHYSICAL SECURITY AND CRIME PREVENTION CHECKLISTS

Military police provide commanders with crime prevention plans that include prevention, enforcement and education on recognizing, countering, and preventing criminal and terrorist activities. As part of crime prevention, military police investigate and report criminal activities that will assist the commander in maintaining unit order and discipline. This appendix contains installation perimeter, facilities and building, port and harbor security, and transportation checklists.

A. Installation Perimeter Checklist

1. Perimeter security

a. Physical barriers

(1) Yes/No. Is there some type of physical barrier; e.g., wall, fence around the installation? If yes, describe. Include guard towers, antivehicle ditches, ground sensors, and exclusion zones if applicable. (Use continuation sheets if necessary.)

_____
_____
_____
_____
_____

(2) Yes/No. Does the barrier establish the property line?

(3) Yes/No. Is the barrier a deterrent to entry. If not, explain.

(4) Yes/No. Does the barrier establish personnel control?

(5) Yes/No. Does the barrier establish vehicle control?

(6) Yes/No. Are there any holes/breach points in the barrier or fence line?

If so, where?

(7) Yes/No. Are there any places along the barrier/fence where the ground is washed away?

If so, where?

(8) Yes/No. Are there any places where streams and/or drainage ditches and tunnels enter the perimeter barrier? If so, where?

(9) Yes/No. Are the above entry points protected? If so, which ones?

(10) Yes/No. Is there a clear zone on each side of the barrier/fence?

What is the clear zone distance on the exterior of the barrier/fence?

(11) Yes/No. Does the perimeter meet the minimum DOD stand-off distance requirement?

What is the distance from the nearest building to the barrier/fence in feet?

(12) Yes/No. Is the clear zone obstructed by obstacles/material near the fence? If so, what?

(13) Yes/No. Are there any poles near the barrier or fence that can be used for entry or exit?

If so, where?

(14) Yes/No. Are there any trees or shrubbery in the clear zone? If so, which ones?

(15) Yes/No. Should trees be removed or shrubbery trimmed? If so, which ones?

(16) Yes/No. Is there a scheduled maintenance/landscape contract to keep the clear zone cut to allow a continuous unobstructed view of the barrier/fence?

(17) Yes/No. Are there any openings other than gates or doors in the barrier or fence that are unprotected? If so, where?

(18) Yes/No. Are there "No Trespassing" signs posted on the fence exterior at regular intervals in local and English languages?

(19) Yes/No. Is the entire fence line within easy view of patrolling guards or closed-circuit TV?

If not, what area is not visible?

(20) Yes/No. Is the perimeter barrier/fence inspected regularly?

(21) Yes/No. Is immediate action taken to repair reported perimeter damage?

(22) Yes/No. Are vehicles allowed to park near the barrier/fence, both internally and externally?

(23) How much time would it take to penetrate the barrier/fence using one of the following?

_____ Wire cutters

_____ Power tools

_____ Vehicle

_____ Explosives

_____ Other hand tools

(24) How many entrance points to the perimeter?_____

How many different exits only?_____

b. Gates and doors

(1) Yes/No. Are all gates/doors secured and operating properly? If not, which ones?

(2) Yes/No. Do swing gates close without leaving a gap? If not, which ones?

(3) Yes/No. Are gates, which are rarely used, properly secured and frequently checked?

(4) Yes/No. Are the locking devices adequate? Do they do the job?

(5) Yes/No. Are alarm devices used on any gates? If not, which ones?

(6) If alarms are used, do they provide:

Yes/No. A local signal?

Yes/No. A signal at a guard office?

(7) Yes/No. Are alarms checked for operating efficiency on a regular basis?

(8) Yes/No. Are any entrances or exits controlled by closed-circuit television or card access?

(9) Yes/No. Are there any gates or doors where closed-circuit television or card access could be used to control access/exit?

(10)Yes/No. Are entrances posted with "No Trespassing" signs in the local language and English?

(11) Yes/No. Has a key control system been established to control issuance of keys and locks?

(12) Yes/No. Are key and lock inventories current?

(13) Yes/No. Is there a back-up set of keys? Are they inventoried and kept separate from the primary set?

(14) Yes/No. Are all perimeter areas lighted during hours of darkness?

(15) Is lighting manual or automatic (circle one: manual/automatic)?

(16) Yes/No. Are all entrance/gates well-lighted?

(17) Yes/No. Does perimeter lighting also cover adjacent buildings? Should it?

(18) Yes/No. If lights burn out, do light patterns overlap for continuous coverage?

(19) Who is responsible for turning lights on/off?

(20) Who is responsible for maintenance?

c. Security personnel

(1)Are guards:

Yes/No. Exposed by lighting?

Yes/No. Protected by lighting?

(2) Yes/No. Do lights at gate(s) illuminate interior of vehicles?

(3) Yes/No. Are critical areas along the perimeter well-lighted?

(4)Yes/No. Is there an auxiliary power source? Is it automatic or manual? If manual, who employs it and how long does it take to employ?

(5)Yes/No. Is there a guard service that supplements the overall antiterrorism plan?

(6)Yes/No. Are background checks conducted on contractor guard personnel?

(7)Yes/No. Is there a rapid response force? Required response time? How often is the rapid response time exercised?

(8) How many guards and shifts are provided?

(9) What is the nationality of the guards? Do they speak the native language and English?

(10)Yes/No. Is there an effective communication(s) system with all guards, both military and contract, with all gates and patrols and supervisors?

(11)Yes/No. Are guards, both military and contract, properly trained and qualified on their assigned weapons?

(12)Yes/No. Have all personnel who perform law enforcement and security duty been trained in the proper use of deadly force?

(13)Yes/No. Is the above training documented and (terrorist) scenario based?

(14)How do guards/security personnel initiate an emergency alarm?

d. Other significant concerns (e.g., emergency procedures, shelters, security enhancements)

(1) What emergency evacuation procedures exist? Are these rehearsed?

(2) Yes/No. Are any internal/external sensors employed to enhance the security posture? If not, should there be?

(3) Yes/No. Do bomb shelters exist? At offices? Living areas?

(4) Yes/No. Are the bomb shelters maintained in safe order? Lighted? Communications?

(5) Yes/No. Have requirements for bomb shelters been coordinated with Service components/ higher headquarters for funding and fielding support?

(6) Yes/No. Are military working dogs, night vision devices, x-ray detection systems, intrusion detection systems, ground sensors, closed-circuit television, day and night surveillance cameras, thermal imaging, advanced communications systems, or any other security related equipment used or required to enhance the antiterrorism posture of this installation?

(List and use continuation sheets as necessary)

_____

_____

_____

_____

e. Host nation (HN) coordination.

Yes/No. Has coordination and/or a formal memorandum of understanding been initiated with any HN official (name and title) for additional security support, including personnel, equipment, perimeter layout, response forces?

2. Airfield security. The following questions are provided to supplement specific airfield security concerns. These questions are not all-inclusive of airfield operations and may be further supplemented:

a. Yes/No. Does the airfield command have an installation security plan that covers the entire facility to include tenant responsibilities? Elaborate:_____

b. Location of airfield:_____

c. Unit inspected:_____

d. Date of this inspection:_____

e. Last time base was inspected:_____

f. Yes/No. Were previous deficiencies corrected?

g. Inspectors:_____

h. Personnel contacted:_____

i. Type of airfield? US Military? US/Multinational collocated? Civilian use?

j. What type of security forces/guards are employed at this base?

____ US military police

____ US Navy master at arms

____ US Air Force security forces

____ Multinational

____ Contracted US or local nationals

k. Yes/No. Are these security personnel trained in the use of deadly force?

l. Yes/No. Is there sufficient stand-off distance from runways to the nearest civilian property?

m. Yes/No. Are alerted aircraft afforded adequate security?

n. Yes/No. Are air operations susceptible to surface-to-air missile attack?

If so, explain countermeasures (e.g., thread surveillance, external perimeter security, host nation patrols).

o. Yes/No. Are any runway approaches or take-offs over water?

If so, is emergency watercraft immediately available to effect rescue operations?

p. Yes/No. Is perimeter fencing and lighting in sound condition?

q. Yes/No. Are bilingual “No Trespassing/Restricted Area” signs posted at regular intervals along the perimeter barrier?

r. Yes/No. Are military and civilian aircraft parked in the same area?

s. Yes/No. Is the control tower entrance continuously secured/guarded?

t. Yes/No. Is emergency lighting systems for security as well as approaching aircraft available? Is it tested periodically?

u. Yes/No. Are security response forces on-call? What is their minimum response time?

3. General comments _____

_____

_____

4. Recommendations

a. Immediate (within 30 days):_____

b. Near Term (within 45-60 days):_____

c. Long Term (60 days or longer):_____

B. Facilities and Building Checklist

1. General information and background

a. Date of this inspection:_____

b. Unit inspected:_____

c. Location/site (include grid coordinates):_____

d. Last time this facility/building was inspected:_____

e. Yes/No. Were previous deficiencies corrected?

f. Inspectors:_____

g. Personnel contacted:_____

2. Facility – building specifics

a. Purpose of this structure:_____

b. Number of floors:_____

c. Approximate number and (nationality) of occupants: _____

d. Type of construction:

___Reinforced concrete

___Tilt-up concrete panels

___Reinforced masonry

___Unreinforced masonry

___Brick

___Trailer

___Metal

___Wood frame

___Other_____

e. Number of entrances:_____exits:_____

Does this building create a likely threat target? Explain.

f. Describe the intervening distance between perimeter barriers and the nearest structure (internal or external) (e.g., open cleared flat land)_____

g. Distance from building to perimeter (_____ft).

h. Distance to vehicle parking from this building (outside of perimeter_____ft).

i. Yes/No. Are exterior power facilities/transformers/fixtures vulnerable to tampering or sabotage?

j. Identify external perimeter obstacles/vulnerabilities (e.g., buildings, dumpsters, parking areas, streets).

k. What physical security measures have been initiated or exist that mitigate perimeter threats (e.g., other buildings, barriers, distance, berms, walls, guards, patrols, host nation assistance).

List:

(1)_____

(2)_____

(3)_____

(4)_____

l. Protection against glass fragmentation:

___ Shatter resistant window treatment

___ Window frame reinforcement

___ Thermally-treated safety glass

___ Polycarbonate

___ Steel doors

___ Door frame reinforcement

___ Heavy duty hinges

___ Other_____

m. Blast protection initiatives:

___ Walls

___ Berms

___ Sealed doors

___ Heavy curtains

___ Sealed windows

___ Steel grates

___ Extending perimeter

___ Shutters

___ Landscaping

3. Facility – building specifics

a. Access, alarms, guard

(1) Yes/No. Are procedures established to control access to the building?

(2) Yes/No. Is a visible identification system established to distinguish employees, residents, and visitors?

(3) Yes/No. Are entrances and exits to this building alarmed?

(4) Yes/No. Are entrances and exits controlled by guards? If yes, circle one: US, multinational, and/or contract.

(5) Yes/No. Guards:

___ Are guards trained and qualified on their individual weapons

___ Are guards trained on use of deadly force

___ Is training documented

___ Are background checks conducted on contract guards

___ Are guards bilingual

___ Do guards incorporate land line communications

___ Can guards communicate with central control security desks and with installation entry control points

(6) Yes/No. Are guards equipped with:

___ Night vision devices

___ CBRN protection

___ Portable communications

___ Body armor

___ Individual weapons/type

___ Binoculars

(7) Yes/No. Are closed-circuit television and/or motion detection systems employed?

(8) Yes/No. Are windows alarmed, grilled, shatter resistant with protective window film?

(9) Yes/No. Does the facility have exterior lighting?

(10) Yes/No. Is the lighting adequate? Does it cover all dead spaces? Do lights overlap to compensate for burnout?

(11) Yes/No. Are outdoor accesses to the building such as fire escapes, roof doors, air vents, and utility openings secured?

(12) Yes/No. Are interior doors to personal rooms, offices, closets, and restrooms locked at night, on weekends, and when unoccupied or unattended?

(13) Yes/No. Is there a security check system that ensure item #12 above is accomplished when the facility is unattended?

(14) Yes/No. Is a positive key control and accountability system established?

(15) Yes/No. Are visitors escorted while in the facility?

(16) Yes/No. Is incoming mail examined?

(17) Yes/No. Are assigned personnel trained not to reveal personal information, itineraries, security measures, home addresses/unit locations or addresses, and telephone numbers to strangers?

(18) Yes/No. Are assigned personnel instructed on how to report suspicious activity?

(19) Yes/No. Are guards/sentries posted to overwatch this building? Is this considered a critical requirement?

b. Emergency procedures

(1) Yes/No. Does the building have a safe haven?

Does it have:

___Emergency water

___Emergency lighting/power

___Emergency medical supplies

___Uninterrupted communication

___Solid core door

___Emergency escape

___Latrine facilities

___Proper ventilation

___Dead-bolt locks

(2) Yes/No. Are assigned personnel trained on actions to take in case of a terrorist attack?

(3) Yes/No. Are terrorist attack and postal bomb drills conducted periodically?

(4) Yes/No. Does the building have an emergency power source such as a generator?

(5) Yes/No. Is the back-up source periodically tested to ensure sound and safe operating conditions? And tested? Are additional operators trained?

(6) Yes/No. Is there an effective intercom and emergency public address system such as "giant voice" utilized at this building?

(7) Yes/No. Is there a back-up?

(8) Yes/No. Is there an emergency evacuation plan? Is it posted on all floors and rehearsed on a periodic basis?

c. Internal building security/safety

(1) Yes/No. Do personal rooms have a door viewers?

(2) Yes/No. Are dead bolt locks installed on entry doors?

(3) Yes/No. Do windows have effective locking devices?

(4) Yes/No. Are elevators available and used in this building?

(5) Yes/No. Do elevators connect controlled access floors with public access floors?

(6) Yes/No. Do elevators service a parking garage?

(7) Yes/No. Do elevators that service garages stop automatically at the lobby? Are elevator passengers observed by personnel at the lobby level before traveling to subsequent floors?

(8) Yes/No. Are there any open stairways to upper or lower levels? Are these stairways supervised or monitored by closed-circuit television?

(9) Yes/No. Are custodial services provided by a contracted, local national source?

(10) What hours do custodial personnel work?

(11) How and whom supervises the custodial staff?

(12) Who approves the employment of custodial staff?

(13) Yes/No. Does the custodial staff have keys to all rooms? Are these controlled? Is the custodial staff permitted to leave the building with these keys?

(14) Yes/No. Is there any control exercised over the custodial staff entering and leaving the building?

(15) Yes/No. Are packages carried by custodial personnel inspected when entering and leaving the building?

(16) Yes/No. Does the building have a sprinkler system?

(17) Yes/No. Is the building equipped with smoke alarms?

(18) Yes/No. Is the building equipped with carbon monoxide alarms?

(19) Yes/No. Is the building serviced by a local fire department? Is this department on the installation or in the local community?

(20) Yes/No. What is the fire department estimated response time to this building? Day? Night?

(21) Yes/No. How many floors can the fire department ladder platform reach?

(22) Yes/No. Based on item #21 above, have alternative emergency evacuation plans been initiated and rehearsed?

(23) Yes/No. Is the building equipped with an audible local fire alarm to alert occupants?

(24) Yes/No. Does the alarm system enunciate at a central control desk and identify the exact location/floor of the incoming alarm? Is the system periodically tested?

(25) Yes/No. Are fire alarm pull boxes located on each floor?

(26) Yes/No. Does each floor have an appropriate number of fire extinguishers? Are these extinguishers checked and serviced accordingly?

4. Yes/No. Has the command conducted a risk assessment concerning the safe and secure occupancy of this building? Does such a risk, if any, outweigh the operational/mission necessity for remaining in the building?

5. Based on the explanation in paragraph 4 above, should the occupants in this building relocate and is such a move time–sensitive? What alternative locations have been considered?

6. General comments _____

_____

_____

7. Recommendations

a. Immediate (within 30 days):_____

b. Near Term (within 45-60 days):_____

c. Long Term (60 days or longer):_____

C. Port and Harbor Security Checklist

1. General description. The medium of water presents unique challenges and stressful demands on security resources and equipment used to build a well-rounded physical security system. This checklist should be used to supplement the integrated principles of installation/perimeter security detailed in the installation perimeter checklist.

a. Provide a general description of the port site

_____

_____

_____

b. Security planning

(1) Yes/No. Has a security officer been appointed on orders?

(2) Yes/No. Does the port facility have a current port security plan (PSP)? Date of plan?

Does the plan include:

___ Preventative measure to reduce opportunities for introduction of bombs

___Procedures for evaluating and handling bomb threats

___Policy for evacuation and safety of personnel

___Procedures to be used to search for bombs

___Procedures in the event a bomb or suspected bomb is found on the port

___Procedures to be taken in the event of a bomb explosion or detonations

(3) Yes/No. Does the port have a counter sabotage program?

(4) Yes/No. Are physical security/vulnerability assessments conducted at least semiannually?

(5) Yes/No. Are threat assessments conducted periodically? How often? By whom?

(6) Yes/No. Has the port commander conducted a “risk analysis” concerning the local terrorist/criminal threat?

(7) Yes/No. Have “Restricted Areas” been designated in writing and applicable signs posted throughout the port area?

(8) Yes/No. Are security measures in effect to protect:

___ Electrical power facilities

___ Communication centers/equipment

___ Arms, ammunition, off-loaded

(9) Yes/No. Are special after-duty hours and weekend security checks conducted on restricted areas?

(10) Yes/No. Are breaches in these security checks promptly reported to the chain of supervision?

(11) Yes/No. Does the port have a privately owned vehicle (POV) parking plan?

(12) Yes/No. Does the parking plan include:

___ Restriction of POV parking in exclusive and limited areas

___ Fenced/enclave parking in controlled areas

___ Restricted parking near perimeter fence lines/barriers

(13) Yes/No. Does the port have a traffic control plan? Is the emergency evacuation?

c. Security force

(1) Yes/No. Is the present security force adequate to handle the stated port security mission?

Explain._____

(2) What is the composition of the security force? (circle) US military, multinational, host nation contract, US contract?

(3) Yes/No. Are security posts, both fixed and mobile, provided with standard operating orders?

(4) Yes/No. Are all guards trained in the use of deadly force? Is this training scenario-based and approved by the serving judge advocate and senior military/police officer?

(5) Yes/No. Are security force orders reviewed at least monthly for currency?

(6) Yes/No. Are security force personnel inspected by a supervisor prior to being posted each shift?

(7) Yes/No. Are multinational and host nation contract guards bilingual?

(8) Yes/No. Do supervisors inspect each post at least twice per shift?

(9) Yes/No. Is there a rapid reaction force available? What is the minimum response time? Is this response time commensurate with the latest threat assessment?

(10) Yes/No. Do security personnel report or record their presence at key locations in the port?

___ Portable watch clocks

___ Telephones

___ Hand-held or vehicle radios

Other means?_____

(11) Describe the host nation/multinational security support provided on the water side of this site:

_____

_____

_____

(12) What additional security measures are implemented for those vessels at anchorage? Who provides this service?

_____
_____
_____

(13) Yes/No. Are guard assignments, times, and patrol routes varied at frequent intervals to avoid establishing routines?

(14) What type and how many watercraft are involved in the port security mission?

_____
_____
_____

(15) Do these craft have viable communication with shore-based security forces? Is there a language barrier?

(16) Yes/No. Are all security force personnel qualified on their assigned weapon(s)? Do they familiarize with these weapons on a quarterly basis?

(17) Yes/No. Are security force vehicles properly equipped with emergency equipment (e.g., lights, communications, siren, public announcement system, proper markings)?

(18) Yes/No. Are security force weapons and ammunition properly secured and accounted for when not in use? Briefly explain procedures:

_____
_____
_____

d. Personnel and vehicle movement control

(1) Yes/No. Is a pass and badge identification system in effect to limit access to the port?

Is this system further supplemented at restricted areas?

(2) Yes/No. Is the pass and badge system used for all personnel entering the port, particularly host nation and third country national personnel?

(3) Yes/No. Is there positive access system in place for visitors and contractors? Are visitors escorted?

(4) Yes/No. Are issued badges serialized and strictly controlled for accountability?

(5) Yes/No. Are lost badges replaced with badges bearing different serial numbers?

(6) Yes/No. Have procedures been established for issuance of temporary badges for those personnel who have forgotten their permanent badges?

(7) Yes/No. Are badges of such design and appearance as to enable guards, and other personnel, to recognize quickly and positively the authorization and limitations applicable to the bearer?

(8) Yes/No. Are procedures in existence to ensure return of badges upon termination of employment or reassignment?

(9) Yes/No. Are POVs and contractor vehicles that routinely have access to the port registered at the security office?

e. Perimeter barriers (See installation perimeter checklist)

f. Protective lighting

(1) Yes/No. Does the protective lighting incorporated for this port meet adequate intensity requirements?

(2) Yes/No. Are the zones of illumination from the lamps directed downward and away from the guard personnel?

(3) Yes/No. Is perimeter protective lighting utilized so that security patrols remain in comparative darkness?

(4) Yes/No. Are lights checked at least weekly for proper operation prior to darkness?

(5) Yes/No. Do light patterns overlap to compensate for burned-out lamps?

(6) Yes/No. Is there a back-up power source for all electrical power?

(7) Yes/No. Is the above source protected?

(8) Yes/No. Is the backup power system easily operated? Are there additional trained operators on each shift that can safely operate this equipment?

(9) The above protective lighting questions extend to any contiguous body of water. Are these areas protected with required lighting as well? Who is responsible for water-side lighting?

2. Yes/No. Do foreign vessels have access to US designated ports? If yes, explain security procedures for:

a. Foreign personnel entering the US port:_____

b. Foreign vessels at anchor:_____

c. Off-loaded cargo, in-transit and/or stockpiled cargo within the US designated port area: _____

3. General comments

_____

_____

4. Recommendations

a. Immediate (within 30 days):_____

b. Near Term (within 45-60 days):_____

c. Long Term (60 days or longer):_____

D. Transportation Checklist

1. General description. The following questions are intended to increase awareness, stimulate thinking and preparation, and enhance transportation protective measures where the threat of terrorist activity is a vital concern.

a. Vehicle identification

(1) What type and quantity of vehicles are used for local transportation?

Tactical:

Nontactical:

Commercial:

(Hardened)

b. Host nation:

(1) Yes/No. Are vehicle safety and maintenance checks conducted prior to usage?

(2) Yes/No. Are vehicles kept in good mechanical condition?

(3) Yes/No. Is maintenance properly documented?

(4) Yes/No. Are vehicles searched prior to use after being parked in a nonsecure area?

(5) Yes/No. Are vehicles secured when not in operation? How? Is off-street secure parking available?

(6) Yes/No. Have vehicle exhausts (e.g., commercial vehicles) been modified to preclude insertion of an explosive device? If yes, explain procedure:

_____

_____

(7) Yes/No. Do vehicles have:

___ Communications

___ Backup communications available

___ Alarm systems

___ Locking gas caps

___ First aid kits

___ Spare tire

___ Road repair tools

(8) Yes/No. Are commercial vehicles rotated among users to confuse possible surveillance activity?

(9) Yes/No. Do drivers have constant communication with a dispatcher, unit operations office, or US Embassy? Briefly explain _____
_____

(10) Yes/No. Are drivers instructed in off-base defensive driving techniques?

(11) Yes/No. Are drivers and passengers provided preconvoy predeparture briefings on:

___ Accident reporting and what to do

___ Vehicle breakdowns

___ Safe havens

___ Emergency actions during contact

___ Reporting suspicious activity

(12) Yes/No. Are convoy routes routinely surveyed for possible terrorist activity/vulnerability? Is this information properly disseminated on a timely basis?

(13) Yes/No. Are departure and return times varied to inhibit predictability?

(14) Yes/No. Is travel off-base limited to mission essential activity?

(15) Yes/No. Are alternate escape routes included in each mission essential travel serial? Do travelers confirm their understanding and familiarity with these plans?

(16) Yes/No. Are escorts provided for each convoy?

(17) Yes/No. Are escorts armed? If yes, by order of whom?

(18) Yes/No. Are all armed personnel trained in the use of deadly force? Is this documented?

(19) Yes/No. Is the training in the use of deadly force terrorist scenario-based?

(20) Yes/No. Is the training in deadly force approved by the local servicing Judge Advocate and senior military/security police officer?

2. General comments _____
_____
_____

3. Recommendations

a. Immediate (within 30 days):_____

b. Near Term (within 45-60 days):_____

c. Long Term (60 days or longer):_____

GLOSSARY
SECTION I. ACRONYMS AND ABBREVIATIONS

AO. . . . . .area of operations

CBCA . . . . . customs and border clearance agent
CBCP . . . . . .Customs and Border Clearance Program
CBP. . . . . United States Customs and Border Protection
CBRN . . . . . chemical, biological, radiological, and nuclear
CI . . . . . civilian internee
CID . . . . . .criminal investigation division
COA . . . . . course of action
CONUS. . . . . continental United States
CTD . . . . . .combat tracker dog
CTUS . . . . customs territory of the United States

DA. . . . . Department of the Army
DC. . . . . dislocated civilian
DD (form) . . . . . Department of Defense
DDD . . . . . drug detector dog
DOD . . . . . Department of Defense
DODD. . . . . Department of Defense directive
DRS. . . . . Detainee Reporting System

EC . . . . . enemy combatant
ECP . . . . . .entry control point
EDD . . . . . explosive detector dog
EPW . . . . . enemy prisoner of war

FACA . . . . . Federal Assimilated Crimes Act
FM. . . . . field manual
FRAGO. . . . . .fragmentary order
FTO. . . . . field training officer

G-2 . . . . . brigade or higher intelligence staff officer

HN. . . . . .host nation

ICRC . . . . . International Committee of the Red Cross
IED . . . . . improvise explosive device
INIWIC . . . . . .Interservice Nonlethal Individual Weapons Instructor Course
ISN . . . . . internment serial number

JPEC . . . . . .joint prosecution and exploitation center

LDO . . . . . limited detainee operations
LOO . . . . . law and order operations

MAGTF . . . . . Marine air-ground task force
MCI-E . . . . . military customs inspector-excepted
MCO . . . . . Marine Corps order
MCRP . . . . . .Marine Corps reference publication
MCWP . . .Marine Corps warfighting publication
MEF . . . . . Marine expeditionary force
MEU . . . . . Marine expeditionary unit
MOS . . . . . military occupational specialty
MP. . . . . military police
MPI . . . . . military police investigator
MSC . . . . . major subordinate command
MSR . . . . . .main supply route
MTT . . . . . mobile training team
MWD . . . . . military working dog

NAVMC . . . . . Navy/Marine Corps departmental publication
NCIS . . . . . Naval Criminal Investigative Service
NCOIC . . . . . noncommissioned officer in charge
NDRC . . . . . National Detainee Reporting Center
NLW . . . . . nonlethal weapon

OCONUS . . . . . outside the continental United States
OIC . . . . . officer in charge
OPNAV. . . . . Office of the Chief on Naval Operations

PCA. . . . . Posse Comitatus Act
PD . . . . . patrol dog

P/DDD . . . . . patrol/drug detector dog
P/EDD. . . . . .patrol/explosive detector dog
PIO . . . . . police intelligence operations
PM. . . . . provost marshal
POD . . . . . plan of the day
PSO . . . . . .protective services operations

RDF. . . . . regional detention facility
RP . . . . . .retained person

S-2. . . . . .intelligence staff officer
SJA . . . . . staff judge advocate
SNCO . . . . . .staff noncommissioned officer
SNCOIC . . . . . staff noncommissioned officer in charge
SOFA . . . . . .status-of-forces agreement
SOP . . . . . standing operating procedures
SPMAGTF . . . . . special purpose MAGTF
SROE . . . . . .standing rules of engagement
SRUF . . . . . standing rules for the use of force
SSD . . . . . specialized search dog
TCP . . . . . traffic control point
TDRC . . . . . theater detainee reporting centers
TIF . . . . . theater internment facility
TQ…….. tactical questioning
TTP . . . . . tactics, techniques, and procedures

UCMJ . . . . . Uniform Code of Military Justice
US . . . . . United States
USDA . .United States Department of Agriculture
USTRANSCOM . . . United States Transportation Command

VCO . . . . . veterinary corps officer

SECTION II. DEFINITIONS

area of operations—An operational area defined by the joint force commander for land and maritime forces. Areas of operation do not typically encompass the entire operational area of the joint force commander, but should be large enough for component commanders to accomplish their missions and protect their forces. Also called **AO**. (JP 1-02)

area of responsibility—The geographical area associated with a combatant command within which a geographic combatant commander has authority to plan and conduct operations. Also called **AOR**. (JP 1-02)

biometric—Measurable physical characteristic or personal behavior trait used to recognize the identity or verify the claimed identity of an individual. (JP 1-02)

biometrics— The process of recognizing an individual based on measurable anatomical, physiological, and behavioral characteristics. (JP 1-02)

biometrics-enabled intelligence—Intelligence information associated with and or derived from biometrics data that matches a specific person or unknown identity to a place, activity, device, component, or weapon that supports terrorist/insurgent network and related pattern analysis, facilitates high value individual targeting, reveals movement patterns, and confirms claimed identity. (DODD 8521.01E)

civilian internee—A civilian who is interned during armed conflict, occupation, or other military operation for security reasons, for protection, or because he or she has committed an offense against the detaining power. (JP 1-02)

civil support—Department of Defense support to US civil authorities for domestic emergencies, and for designated law enforcement and other activities. (JP 1-02)

contraband—Material, goods, plant and animal products, agricultural pests and hazards, and other articles prohibited entry into the Customs and Border Territory of the United States or host nation country, including controlled substances, as identified in 21, United States Code 812, Schedules of Controlled Substances, and restricted items when the conditions of the restriction have not been met. (DOD 4500.9-R)

controlled substance—1. A drug or other substance, or immediate precursor included in Schedule I, II, III, IV, or V of the Controlled Substances Act. (JP 1-02)

counterdrug operations—Civil or military actions taken to reduce or eliminate illicit drug trafficking. (JP 1-02)

counterinsurgency—Comprehensive civilian and military efforts taken to defeat an insurgency and to address any core grievances. (JP 1-02)

customs territory of the United States—The 50 United States, the District of Columbia, and Puerto Rico Not included are American Samoa, Guam, Johnston Island, Midway Island, the Virgin Islands of the United States, Wake Island, or the former Panama Canal Zone. (DOD 4500.9-R)

deadly force—Deadly force is force likely to cause death or serious physical injury.

defense in depth—The siting of mutually supporting defense positions designed to absorb and progressively weaken attack, prevent initial observations of the whole position by the enemy, and to allow the commander to maneuver his reserve. (JP 1-02)

dislocated civilian—A broad term primarily used by the Department of Defense that includes a displaced person, an evacuee, an internally displaced person, a migrant, a refugee, or a stateless person. Also called **DC**. See also **displaced person; evacuee; internally displaced person; migrant; refugee; stateless person.** (JP 1-02)

displaced person—A broad term used to refer to internally and externally displaced persons collectively. See also **evacuee; refugee.** (JP 1-02)

evacuee—A civilian removed from a place of residence by military direction for reasons of personal security or the requirements of the military situation. See also **displaced person; expellee; refugee.** (JP 1-02)

expellee—A civilian outside the boundaries of the country of his or her nationality or ethnic origin who is being forcibly repatriated to that country or to a third country for political or other purposes. (JP 1-02)

force continuum—The wide range of possible actions ranging from voice commands to application of deadly force that may be used to gain and maintain control of a potentially dangerous situation.

force protection—Preventive measures taken to mitigate hostile actions against Department of Defense personnel (to include family members), resources, facilities, and critical information. Force protection does not include actions to defeat the enemy or protect against accidents, weather, or disease. (JP 1-02).

host nation—A nation which receives the forces and/or supplies of allied nations and/or NATO organizations to be located on, to operate in, or to transit through its territory. Also called **HN**. (JP 1-02)

improvised explosive device—A device placed or fabricated in an improvised manner incorporating destructive, lethal, noxious, pyrotechnic, or incendiary chemicals and designed to destroy, incapacitate, harass, or distract. It may incorporate military stores, but is normally devised from nonmilitary components. Also called **IED**. (JP 1-02)

intelligence preparation of the battlespace—The systematic, continuous process of analyzing the threat and environment in a specific geographic area. Also called **IPB**. (MCRP 5-12C)

interagency—United States Government agencies and departments, including the Department of Defense. (JP 1-02)

internally displaced person—Any person who has been forced or obliged to flee or to leave their home of places of habitual residence, in particular as a result of or in order to avoid the effects of armed conflict, situations of generalized violence, violations of human rights or natural human-made disasters, and who have not crossed an internationally recognized state border. (JP 1-02)

joint interrogation and debriefing center—Physical location for the exploitation of intelligence information from detainees and other sources. Also called **JIDC**. (JP 1-02)

law enforcement agency—Any of a number of agencies (outside the Department of Defense) chartered and empowered to enforce US laws in the following jurisdictions: The United States, a state (or political subdivision) of the United States, a territory (or political subdivision) of the United States, a federally recognized Native American tribe or Alaskan Native Village, or within the borders of a host nation. Also called **LEA**. (JP 1-02)

Marine Corps installations—Those installations, bases, and/or stations under the control, supervision, jurisdiction, or responsibility of and operated by the Marine Corps or unit of the Marine Corps.

migrant—A person who (1) belongs to a normally migratory culture who may cross national boundaries, or (2) has fled his or her native country for economic reasons rather than fear of political or ethnic persecution. (JP 1-02)

military jurisdiction—The extent of and limitation on the right of an armed force to exercise authority and control over persons and offenses.

mission assurance—A process to ensure that assigned tasks or duties can be performed in accordance with the intended purpose or plan. It is a summation of the activities and measures taken to ensure that required capabilities and all supporting infrastructures are available to the DOD to carry out the National Military Strategy. It links numerous risk management program activities and security related functions—such as force protection; antiterrorism; critical infrastructure protection; information assurance; continuity of operations; chemical, biological, radiological, nuclear, and high-explosive defense; readiness; and installation preparedness—to create the synergistic effect required for DOD to mobilize, deploy, support, and sustain military operations throughout the full range of military operations. (DODD 3020.40)

nonlethal weapon—A weapon that is explicitly designed and primarily employed so as to incapacitate personnel or materiel, while minimizing fatalities, permanent injury to personnel, and undesired damage to property and the environment. Also called **NLW**. (JP 1-02)

operational environment—A composite of the conditions, circumstances, and influences that affect the employment of capabilities and bear on the decisions of the commander. (JP 1-02)

physical security—1. That part of security concerned with physical measures designed to safeguard personnel; to prevent unauthorized access to equipment, installations, material, and documents; and to safeguard them against espionage, sabotage, damage, and theft. (Part 1 of a 2 part definition, JP 1-02)

Posse Comitatus Act—Prohibits search, seizure, or arrest powers to US military personnel. Amended in 1981 under Public Law 97-86 to permit increased Department of Defense support of drug interdiction and other law enforcement activities. (Title 18, "Use of Army and Air Force as Posse Comitatus" - United States Code, Section 1385) (JP 1-02)

preservice training—Initial law enforcement training conducted before an individual begins service in law enforcement duties, police, criminal investigations, and detention operations.

refugee—A person who owing to a well-founded fear of being persecuted for reasons of race, religion, nationality, membership of a particular social group or political opinion, is outside the country of his or her nationality and is unable or, owing to such fear, is unwilling to avail himself or herself of the protection of that country. See also **dislocated civilian; displaced person; evacuee; expellee; stateless person.** (JP 1-02)

retained person—Individuals under the custody and/or control of the Department of the Defense according to Reference (g), Article 33. (DODD 2310.01E)

sensitive site exploitation—A related series of activities inside a captured sensitive site to exploit personnel documents, electronic data, and material captured at the site, while neutralizing any threat posed by the site or its contents. Also called **SSE**. (JP 1-02).

stability operations—An overarching term encompassing various military missions, tasks, and activities conducted outside the United States in coordination with other instruments of national power to maintain or reestablish a safe and secure

environment, provide essential governmental services, emergency infrastructure reconstruction, and humanitarian relief. (JP 1-02)

stateless person—A person who is not considered as a national by any state under the operation of its law. See also **dislocated civilian; displaced person; evacuee; expellee; refugee.** (JP 1-02)

supporting distance—The distance between two units that can be traveled in time for one to come to the aid of the other.

supporting range—The distance one unit may be geographically separated from a second unit yet remain within the maximum range of the second unit's weapons systems.

tactical questioning—Direct questioning by any Department of Defense personnel of a captured or detained person to obtain time-sensitive tactical intelligence information, at or near the point of capture or detention and consistent with applicable law. Also called **TQ**. (JP 1-02)

REFERENCES AND RELATED PUBLICATIONS

Geneva Conventions of 1949

Convention (I) for the Amelioration of the Condition of the Wounded and Sick in Armed Forces in the Field. Geneva, 12 August 1949

Convention (II) for the Amelioration of the Condition of the Wounded, Sick and Shipwrecked Members of Armed Forces at Sea. Geneva, 12 August 1949

Convention (III) relative to the Treatment of Prisoners of War. Geneva, 12 August 1949

Convention (IV) relative to the Protection of Civilian Persons in Time of War. Geneva, 12 August 1949

Federal Publications

Federal Statutory Laws

Manual for Courts-Martial United States

National Defense Strategy

Uniform Code of Military Justice

United States Code, Title 18, *Crimes and Criminal Procedure*, part I, chap. 1, sect. 13, *Laws of States Adopted for Areas Within Federal Jurisdiction*

Department of Defense Issuances

Department of Defense Directives (DODDs)

2310.01E	The Department of Defense Detainee Program
3000.3	Policy for Non-Lethal Weapons
3000.07	Irregular Warfare (IW)
3020.40	Defense Critical Infrastructure Program (DCIP)
3025.12	Military Assistance for Civil Disturbances (MACDIS)
3025.15	Military Assistance to Civil Authorities
3115.09	DOD Intelligence Interrogations, Detainee Debriefings, and Tactical Questioning
5030.49	DOD Customs Inspection Program
5111.10	Assistant Secretary of Defense for Special Operations and Low-Intensity Conflict and Interdependent Capabilities (ASD(SO/LIC&IC))
5525.5	DOD Cooperation with Civilian Law Enforcement Officials
8521.01E	Department of Defense Biometrics

Department of Defense Regulation (DODR)

4500.9-R	Defense Transportation Regulation (DTR)

Defense Intelligence Agency Manual

58-12 The Department of Defense Human Intelligence System

Chairman of the Joint Chiefs of Staff Instruction (CJCSI)

3121.01B (S) (NOTAL), Standing Rules of Engagement for US Forces/Standing Rules for the Use of Force

Joint Publication (JP)

1-02 Department of Defense Dictionary of Military and Associated Terms
2-0 Joint Intelligence
3-01.1 Countering Air and Missile Threats
3-03 Joint Interdiction
3-06 Joint Urban Operations
3-07.1 Joint Tactics, Techniques, and Procedures for Foreign Internal Defense (FID)
3-07.3 Peace Operations
3-07.4 Joint Counterdrug Operations
3-08 Interagency, Intergovernmental Organization, and Nongovernmental Organization Coordination During Joint Operations Volumes I and II
3-16 Multinational Operations
3-24 Counterinsurgency Operations
3-26 Counterterrorism
3-27 Homeland Defense
3-28 Civil Support
3-29 Foreign Humanitarian Assistance
3-32 Command and Control for Joint Maritime Operations
3-57 Civil-Military Operations
3-60 Joint Targeting
3-63 Detainee Operations
3-68 Noncombatant Evacuation Operations

Secretary of the Navy (SECNAV) Instruction

Possee Comitatus Act (PCA)

Navy/Marine Corps Departmental Publications (NAVMCs)

2890 Small Wars Manual
2927 Antiterrorism/Force Protection Campaign Plan
3500.10 Military Police and Corrections Training and Readiness Manual

Army Field Manuals (FMs)

3-07 Stability Operations (proposed FM 1-04.10)
3-19.1 Military Police Operations (proposed FM 3-39)
3-19.13 Law Enforcement Investigations (proposed ATTP 3-39.12)
3-19.15 Civil Disturbance Operations (proposed ATTP 3-39.33)

3-19.17	Military Working Dogs (proposed ATTP 3-39.34)
3-19.4	Military Police Leaders' Handbook (proposed TC 3-39.30)
3-19.50	Police Intelligence Operations (proposed ATTP 3-39.20)
5-34	Engineer Field Data
3-19.40	Internment/Resettlement Operations
27-10	The Law of Land Warfare (proposed FM 1-04.10)

Marine Corps Publications

Marine Corps Doctrine Publications (MCDPs)

1	Warfighting
1.0	Marine Corps Operations
1-2	Campaigning
1-3	Tactics
2	Intelligence
3	Expeditionary Operations
5	Planning

Marine Corps Warfighting Publications (MCWPs)

2-1	Intelligence Operations
2-2	MAGTF Intelligence Collection
2-3	MAGTF Intelligence Production and Analysis
2-4	Marine Air-Ground Task Force Intelligence Dissemination
3-02D	Combating Terrorism
3-15.8	MTTP for the Tactical Employment of Nonlethal Weapons (NLW)
3-33.8	Peace Operations, Multi-Service Tactics, Techniques, and Procedures for Conducting Peace Operations
3-33.5	Counterinsurgency
5-1	Marine Corps Planning Process
5-12	The Commander's Handbook on the Law of Naval Operations

Marine Corps Reference Publications (MCRPs)

3-17A	Engineer Field Data
3-31.4B	Cordon and Search, Multi-Service Tactics, Techniques, and Procedures for Cordon and Search Operations
3-33.8A	Advising, Multi-Service Tactics, Techniques, and Procedures for Advising Foreign Forces

Marine Corps Interim Publications (MCIPs)

3-33.01	Small-Unit Leader's Guide to Counterinsurgency
3-34.01	Military Working Dogs in Urban Terrain
3-35.01	Tactics, Techniques, and Procedures (TTP) for Reduction of Urban Area Strongpoints

Marine Corps Orders (MCOs)

3461.1	Enemy Prisoners of War, Retained Personnel, Civilian Internees and Other Detainees

5530.14A Marine Corps Physical Security Program Manual
5580.2B Law Enforcement Manual

Navy Tactics, Techniques, and Procedures (NTTP)

3-07.11M Navy Tactics, Techniques, and Procedures, Maritime Interception Operations

Miscellaneous

A Cooperative Strategy for 21st Century Seapower
Capstone Concept of Operations for DOD Forensics
Charter of the United Nations, Chapter VII: Action with Respect to Threats to the Peace,
Combat Hunter Handbook
Biometrics Smartbook
Breaches of the Peace, and Acts of Aggression
Domestic Operational Law Handbook for Judge Advocates
Irregular Warfare (IW) Joint Operating Concept (JOC)
JCISFA SFA Planner's Guide
Marine Corps Operating Concepts for a Changing Security Environment
Multi-Service Concept for Irregular Warfare
USAID Fragile States Strategy
USAID Security Sector Reform
Weapons Technical Intelligence Handbook
United Nations Convention Relating to the Status of Refugees
United States Chemical Weapons Convention

USMC
USMC